ROBOTICS MICROCONTROLLERS COMPUTER CONTROL SPACE

Everything For Electronics

Nuts & Volts

June 2004

www.nutsvolts.com

Signal Generation

- Techniques
- Schematics

CDMA Explained

THE ENIGMA MACHINE: LIGHTNING IN THE PALM OF YOUR HAND

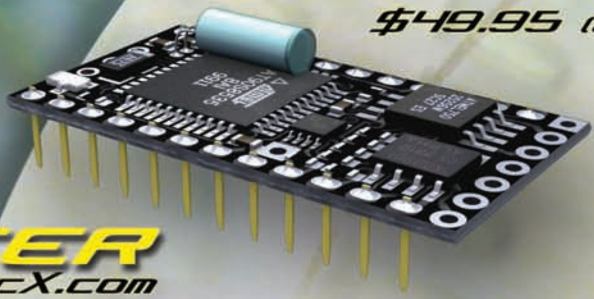


2x16 Serial LCD
Only $39.95!

14VAC, 1kVA Xfmr

- 120VAC input, 14VAC output @ 1kVA
- Ship weight - abt. 26lbs.
- 5.25" core height, 5.50"L and 3.50"W hole-to-hole center mounting footprint
- Screw primary, hvy lugged sec. leads
- New, HSC 90-day warranty

HSC#19986 $45.00!

Internet TV Appliance!

- No PC! Just TV, phoneline & your ISP!
- InfaRed keyboard incl!
- Internal 33.6K modem
- Onscreen keyboard w/included remote
- Power supply, manual, easy hook up!
- New, boxed, 90-day warranty

HSC# 20027 $29.95!

Wireless Optical Mouse!

- Memorex 'ScrollPro' model, RF-type
- USB-type (PS/2 to USB adapter incl.)
- Optical technology = precise tracking
- Mouse port charging station included, NO MORE DEAD BATTERIES!
- 5 buttons w/ scroll wheel
- New, 90-day warranty

HSC#20055 $14.95!

Lighted PS/2 Keyboard!

- Full-featured keyboard w/backlighting!
- Key backlight can be switched off
- Draws power through PS/2 connector
- Additional 'hotkeys', black body
- New, 90-day warranty

HSC#80749 $29.95!

Keypad + Display

- 16 button keypad w/display shown below
- Single +5VDC supply
- 26 cond. ribbon cable w/IDC conn.
- Display data sheet @ www.halted.com/onlineresources.html
- HSC 90-day warranty

HSC#19987 $8.95!

Ultrasonic Transducer!

- Similar to SonaSwitch 'Mini-S'
- Mounts in 1.575" hole!!
- Fixed range: 5-7 feet.
- Rep. sense rate: 10Hz
- Three hits to turn on, three misses - off.
- See 'http://www.edpcompany' for info.
- HSC 90-day warranty

HSC#19833 $9.95!

Audio/Video Modulator

- Blonder-Tongue Model No. MVAM-s
- 50 - 440 MHz range, 19" rack mount
- Adj. video, audio, aural, audio in
- Audio/video overmod LEDs, 'F' conns.
- 110VAC, UL listed, used, 30-day warr.

HSC#19641 $19.95!

Wireless Video System!

- Tiny 3/4 in. color camera w/transmitter!
- Receiver is tuneable for best signal
- 9VDC batt. conn. for portable camera
- AC power packs for both units!
- RCA plugs for A/V out,
- 'F' conn for whip.
- New, 90-day warranty

HSC#80748 $79.95!

Color Touch Screen!

- ALPS LFH8P4032E
- 240x320 diag. LCD STN display w/CCFL backlight
- 4-wire touchscreen intfce.
- 2.75" x 3.50" x 0.375"
- http://hubbard.engr.scu.edu/embedded/lcd/lfh8p4032b/lfh8p4032b.html for info

Special!... 2 for $59.95!

HSC#19827 $39.95!

Blowout Specials!!...

Dot Matrix Display
#19429 $8.00

Wireless LAN Card
#19737 $6.00!

Wireless PCI Card
#19743 $6.00!

Wireless USB Adap
#19738 $6.00!

7-Bay Cabinet
#80544 $20.00

'Mylex' RAID Card
#19427 $29.50!

1U Rack Cabinet
#19437 $9.00!

80W Power Supply
#18415 $5.00

9.1GB Ultra SCSI
HSC#18753 $14.00!

150W Power Supply
#19266 $8.00

Pixie2 QRPp Xcvr!
#Pixie2 $9.95

PCMICA SCSI
#19160 $35.00

AC only VHS Player
#19152 $10.00!

200W Power Supply
#19267 $10.00

Buy Now Prices!!

NiMH Battery Charger!

- Charges 2 or 4 AA or AAA sizes.
- Auto selects proper charge current
- Front/rear compartment LED indicators
- 4, 2000mAh batts included!
- For 110VAC use
- Great for digital cameras!
- New, 90-day warranty

HSC#80746 $12.50!

Dot Matrix Display

- 'Optrex' Model No. DMC-16106A
- 16 X 1 char. dot matrix, (5x7/5x10 font)
- 80 character display RAM
- Opr range: 0 to +50 deg. C, 5VDC
- HSC 90-day warranty

HSC#19988 $7.50!

4"Color LCD Monitor!

- Model PCM-4NP 4" TFT LCD
- Great for long road trips, security...etc.
- Std 3.58MHz NTSC & 4.33MHz PAL
- Built-in speaker, side-mtd display cntrls
- AC & DC pwr. supplies incl.
- Comes with cables & stands
- New, 90-day warranty

HSC#80750 $79.95!

12VDC, 3.4A Supply

- 'Copper Com' AC/DC adapter
- Input: 120VAC, 60Hz, 70W
- Output: 12VDC@3.4A (~16.3VDC unloaded)
- 'Desktop'-style package - many uses
- New units, OEM pkg (plain white box)
- New, 90-day warranty

HSC#19312 $9.95!

4-Bay SCSI Enclosure

- High quality cabinet
- Extra cooling fan
- 200 W fan-cooled supply
- Std. D25 rear panel conn.
- SCSI ID switch included
- New, HSC 90-day warranty

HSC#19703 $24.95

External Hard Drive Systems!

Uses PC parallel port - Drives not Incl.

- 'Datafab' "Mobile Disk" MD-2
- For 2.5" IDE hard drives
- Drivers @ www.hsces.com/onlineresources.html
- Boxed, w/cables, for DOS, Win95+

HSC#19975 $19.95!

- 'H45' "QuickDrive"
- For 3.5" IDE drives
- For DOS, W95+
- Boxed, w/diskettes & cabl

HSC#19976 $19.95!

- PCMCIA option interface
- For HSC#19976 system

HSC#19995 $9.95!

DirectTV Satellite Dish

- Winegard Model No. 'WG18DUAL'
- 19.25" x 21" ellipitical
- Calif. Amplifier LMB
- 12.2 - 12.7GHz in, 950 - 1450MHz out
- 75 ohm 'F' connector
- New units, w/all hdwr, 90-day warranty

HSC# 20161 $24.95!

18GB SCA SCSI

- Seagate 'Cheetah' Ultra-2 Wide
- Formatted Capacity: 18.21GB
- Speed: 10,000RPM
- HSC 90-day warranty
- HSC Special!!...get our 'SCS3700' SCA to SCSI 1 adapter Reg. $12.50...for $7.50 w/this drive!

HSC#19781 $19.95!

2U Rack Cabinet

- Includes std. 300W ATX power supply
- ATX M/B compatible
- 4 - 60mm cooling fans!!
- Quality construction
- Drive mtg. hdwr not included
- Front/rear panel slots, 3 switches, LED
- New, HSC 90-day warranty

HSC#19848 $39.95!

Pen Tablet Computer!

- Fujitsu 'Stylistic 1000', 486DX100
- SIO, PIO, 2-PCMCIA slots, 1 expanded for PCMICA HD (not incl)
- Mobile pwr supply incl.
- No pen, no AC ps, mono display
- Great for controller, terminal...etc!
- New units, 90-day warranty

HSC# 20028 $29.95!

HSC Electronic Supply

Since 1963!...

Silicon Valley's Electronic Marketplace

3 Retail/Wholesale Locations:
Main Office - Mail Orders...
3600 Ryder St. Santa Clara, CA 95051

Santa Clara	**1-408-732-1573**
Sacramento	**1-916-338-2545**
Rohnert Park	**1-707-585-7344**

Look For Us! on... ebay
keyword: hscelectronicsupply

Order Toll-Free: 1-800-4-HALTED(442-5833)
or...ONLINE, AT: www.halted.com

Terms: Some quantities limited; all items are subject to prior sale. **Minimum order: $10.00 plus shipping.** Orders under $20.00 subject to $2.00 handling fee, in addition to shipping. All orders shipped by UPS Surface unless otherwise specified. $6.00 UPS charge added for COD. Visit our website for detailed information on domestic and international shipping methods.

Circle #71 on the Reader Service Card.


TETSUJIN 2004
Man joins Machine in a test of Imagination, Physical Strength, and Mental Agility.
October 21-23
Santa Clara, CA
100 LBS
www.servomagazine.com
Enter the competition!

Answer the challenge of Tetsujin 2004 today!

Every so often, a challenge comes along that is just too good to pass up. If matching your skills and ideas against those of the brightest minds in a competition that is sure to test the limits of technology and imagination gets your hydraulic fluid pumping, then you'll want to be involved. TETSUJIN 2004 is just such an event. A cross between Robot Wars, Monster Garage, and the DARPA Grand Challenge, TETSUJIN 2004 requires competitors who know how to think outside the box.

Held in conjunction with RoboNexus, Tetsujin is already attracting the attention of industry and media.

If you are even considering competing, send an email to **tetsujin@servomagazine.com** declaring your intent to participate and a short description of your team including the number of members, business or academic affiliation (if any), location (city & state), and means of contact (Email, phone).

We'll add you to our Email list to keep you informed of event info, updates, and deadlines.

The Challenge!

Build a powered, articulated exoskeleton for a human operator capable of lifting a load of from 100 to 720 kg from the ground to a maximum height of 1 meter and returning the load to the ground in a controlled manner.

Who can participate?

Schools, Individuals, Industry, Military, Private Parties, Robot Clubs, etc.

What do I need to compete?

Knowledge of control systems
Mechanical design
Welding
Material selection
Electronics
Hydraulics / pneumatics
Motors and gearing
Software
Imagination
Ingenuity

What's in it for me?

Gain prestige and recognition by industry and academic institutions.
Develop a technology that could be used for helping the disabled.
Spotlight your talent and skills to corporate headhunters.
Win cash and prizes totalling $25,000.00.
Be showcased in the pages and on the cover of SERVO Magazine.
Push your limits by doing something that hasn't been done before.

Important Submission Deadlines

June 14th - Entry forms
August 16th - Photos and documentation
September 27th - Operational video

RoboNexus

The International Business Development, Educational and Consumer Event For Personal, Service and Mobile Robotics
Santa Clara Convention Center, October 21-23, 2004

www.robonexus.com

contents

June 2004
Vol. 25 No. 6

PROJECTS

FEATURES

THE NEXT GENERATION IN COMPETITION:

COLUMNS

DEPARTMENTS

Nuts & Volts (ISSN 1528-9885/CDN Pub Agree#40702530) is published monthly for $24.95 per year by T & L Publications, Inc., 430 Princeland Court, Corona, CA 92879. PERIODICALS POSTAGE PAID AT CORONA, CA AND AT ADDITIONAL MAILING OFFICES. POSTMASTER: Send address changes to **Nuts & Volts, 430 Princeland Court, Corona, CA 92879-1300** or Station A, P.O. Box 54, Windsor ON N9A 6J5.
cpcreturns@nutsvolts .com

Polaris Industries, Inc.

1983 - 2004

POLARISUSA.COM

YOUR ONE STOP SUPPLY FOR ALL YOUR VIDEO SECURITY NEEDS

GW-2400SA

$379.95

2.4 Ghz Wireless Monitor / Camera Package.
12V DC

VT-75

$129.95

1/3" Color Dome Camera.

420 TVL / 0.5 LUX

VPD-01

$119.95

Vandal Proof Color Dome - 360 TVL
2.0 LUX

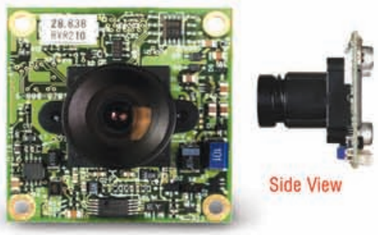

MB-1250U

$89.95

1/4" Color Micro Board Camera.

380-470 Enhanced TVL

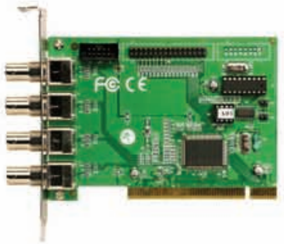

DVC-PRO140

$99.95

4 Camera PCI Card

View Up to 16 Cameras Using Your PC!
(With All 4 Cards Installed)

TFT-56

$199.95

5.6" Color TFT-LCD Monitor. 12V DC.

960(h) x 234(v) Res.

WIC-10

$399.95

2.4 GHz Wireless Internet Camera

330 TVL / 30 fps

WIH-10

$169.95

Wireless Access Point. For Use with the WIC-10

RMM-354SN

$899.95

3.5" TFT
Rack Mount System.
Includes 4 Monitors.

Polaris Industries, Inc.

3158 Process Drive · Norcross, GA · 30071

Over 1000 Products! · 21 Years of Excellence

Security Cameras . Lenses . Packages . Wireless . DVRs . Monitors . Cables

Circle #73 on the Reader Service Card.

Toll Free
800-308-6456

Local
678-405-6080

Web Site
PolarisUSA.com

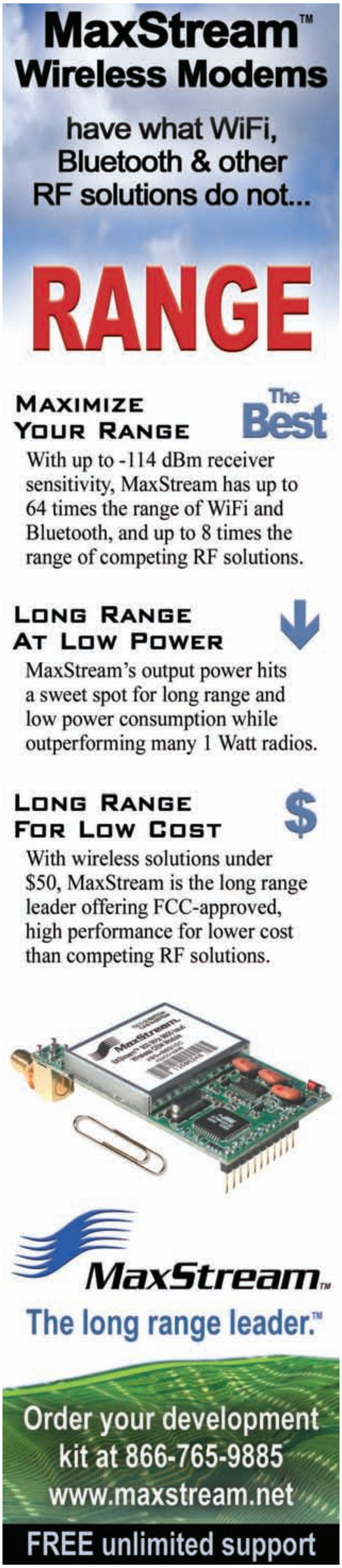

Reader Feedback

Announcing Our New Area Code

As of July 17, our area code will change from **(909)** to **(951)**. This will affect both our phone and FAX numbers.

Dear Nuts & Volts,

I want to thank you for your excellent articles. I am a transfer subscription from *Poptronics*. I never knew your publication even existed until that point. In that way, I'm glad things happened the way they did. I especially like the columns "Q & A," "Just for Starters," and "Stamp Applications." Keep up the good work and I will keep learning from you.

Ken Burch
Deer Lodge, MT

Dear Nuts & Volts,

In the April 2004 issue. on page 16, Louis Frenzel states. " Of course, all satellite TV has always been digital." This is not true, since the best picture quality on satellite TV is analog.

Jim
via Internet

Jim is correct that I was wrong. I was thinking about modern satellite TV, as it is today. It is indeed digital. Of course, the old satellite TV of the 1980s that everyone tried to steal from C band satellites with 15-foot dishes was analog, but I certainly don't agree that the quality of that was better than the digital TV of today.

Louis Frenzel

Dear Nuts & Volts,

As a footnote to my article in the January *Nuts & Volts* describing a HV supply for G-M tubes, I've found an easy way to measure up to 2,000 V. Apart from a plastic case, a battery, an on/off switch, and two banana sockets, you'll need only three components. One is a 1,000 MΩ, 1.5 W, 1% thin-film resistor. Digi-Key sells it as their part SM104F-1000M for $4.54. Another is a 100K 1% resistor you can find at RadioShack. The indicating device is one of those little 3-1/2 digit panel meters that run from a 9 V battery. This has an input scale of 200 mV and an input leakage of 1 picoamp. You can pick one up from All Electronics as catalog #PM-200 for $7.00.

The schematic below shows how to wire things together. The result is a meter that indicates in volts up to 1,999 V and takes at most 2 µA from the source. Be careful to handle the high-value resistor only by its leads — the last thing it needs is fingerprints causing surface leakage. Nothing you try to clean it with is likely to improve on the manufacturer's treatment.

With this meter, my HV generator's output drops about 10 V at high counting rates. This isn't enough to matter in most cases, but does suggest running at a higher repetition rate when measuring high dose rates.

Tom Napier
North Wales, PA

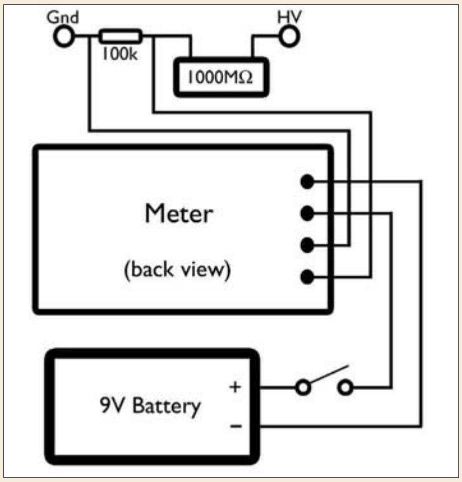

ERRATA

Many of you have wondered how columnist James Antonakos calculated the travel time of light through his 100 meter fiber optic cable. We apologize for omitting the equation explaining this 498 ns calculation on page 9 of the May, 2004 issue. — Editor Dan

$$Tfiber = \frac{100m}{(0.67)(3x10^{8}\,m/s)} = \frac{100m}{2.01x10^{8}\,m/s} = 498ns$$

Published Monthly By
T & L Publications, Inc.
430 Princeland Ct., Corona, CA 92879-1300
(909) 371-8497
FAX **(909) 371-3052**
www.nutsvolts.com
Subscription Order ONLY Line
1-800-783-4624

FOUNDER/ASSOCIATE PUBLISHER
Jack Lemieux

PUBLISHER
Larry Lemieux
publisher@nutsvolts.com

ASSOCIATE PUBLISHER/ VP OF SALES/MARKETING
Robin Lemieux
robin@nutsvolts.com

ADVERTISING SALES DIRECTOR
Rich Collins
rich@nutsvolts.com

MANAGING/TECHNICAL EDITOR
Dan Danknick
dan@nutsvolts.com

ASSOCIATE EDITOR
Alexandra Lindstrom
alexa@nutsvolts.com

CONTRIBUTING EDITORS

Jeremy Clark
Peter Best
Mark Balch
Louis Frenzel
Jeff Eckert
Jon Williams
Gerard Fonte
Tom Napier
Paul Florian
TJ Byers
Paul Verhage

CIRCULATION DIRECTOR
Mary Descaro
subscribe@nutsvolts.com

SHOW COORDINATOR
Audrey Lemieux

WEB CONTENT/NV STORE
Michael Kaudze
michael@nutsvolts.com

PRODUCTION/GRAPHICS
Shannon Lemieux

DATA ENTRY
Janessa Emond
Kristan Rutz

Copyright 2004 by **T & L Publications, Inc.**
All Rights Reserved

All advertising is subject to publisher's approval. We are not responsible for mistakes, misprints, or typographical errors. *Nuts & Volts Magazine* assumes no responsibility for the availability or condition of advertised items or for the honesty of the advertiser. The publisher makes no claims for the legality of any item advertised in *Nuts & Volts*. This is the sole responsibility of the advertiser. Advertisers and their agencies agree to indemnify and protect the publisher from any and all claims, action, or expense arising from advertising placed in *Nuts & Volts*. Please send all subscription orders, correspondence, UPS, overnight mail, and artwork to: **430 Princeland Court, Corona, CA 92879.**

Ivex Complete Electronic CAD for Windows sets the stage for your next big idea!

All the tools you need together at a special bundle savings! http://www.ivex.com/basic650

	Ours	Theirs
Schematics	✓	✓
PCB Layout + AutoRouting	✓	✓
Web-based Manufacturing	✓	
Order Online: Download and start using it TODAY!	Starts under $500	Up to $4,000 (or more!)

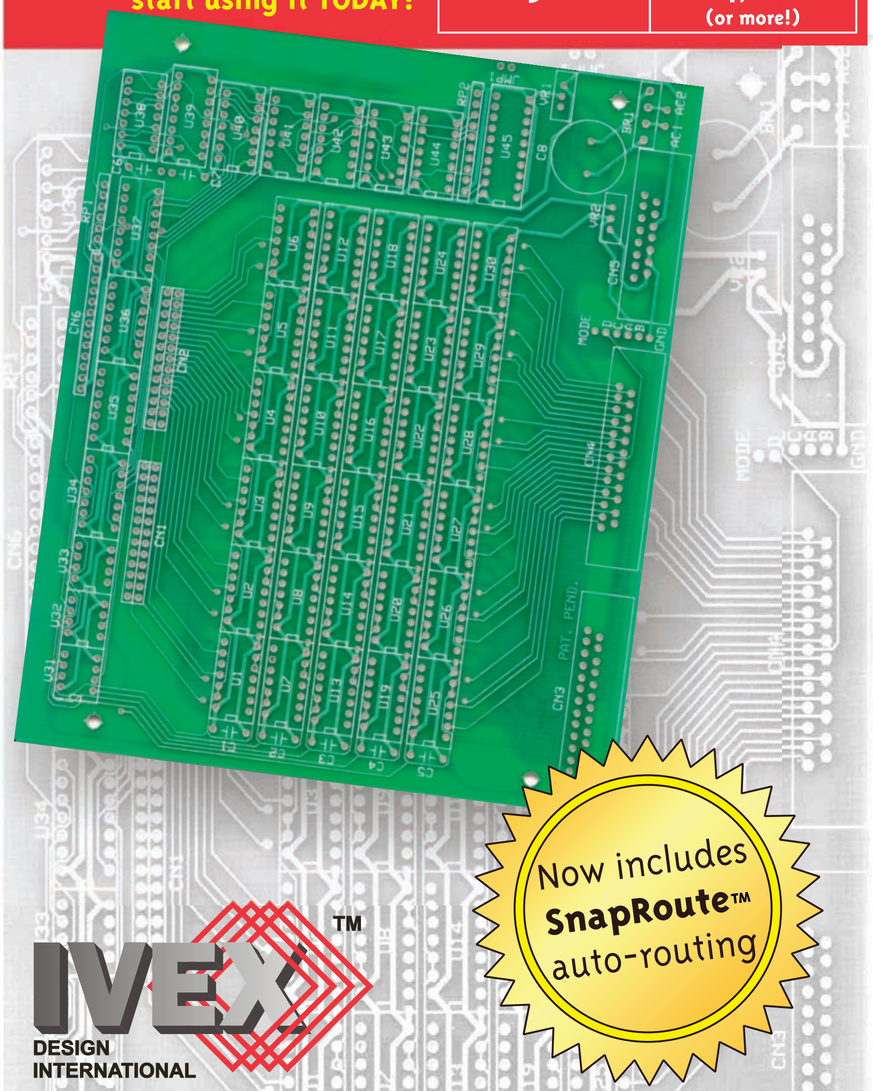

Now includes **SnapRoute™** auto-routing

IVEX™ DESIGN INTERNATIONAL

Ivex Design International, Inc.
P.O. Box 7156
Beaverton, OR 97007 USA

sales@ivex.com
Tel: 503-531-3555

ADV_15

Approaching the Final Frontier

Near Space

Choosing the Best Data Loggers for Your Flight

Data Loggers

There are several data loggers that are capable of fitting inside a lunch bag. By carrying one of these on the mission, you can collect additional science and engineering data. Since the data loggers collect data at a fixed rate (you program this rate into the data logger), you can relate the recorded data to the altitude of the near spacecraft.

Here are two commercially available data loggers to try: the HOBO and the Thermochron. I have used the Thermochron on several flights and purchased a HOBO for evaluation. I like my experiences with the Thermochron and am impressed with my HOBO and plan to use it on my next flight.

HOBO

Manufactured by Onset, the HOBO is an entire family of data loggers. The ones I describe here are used with the University of Colorado (Boulder, CO) BalloonSat program and are a little larger than a box of matches. I weighed mine and it was only 0.9 ounces. I imagine my sensor would weigh more.

The HOBO. Photo courtesy of Onset.

The least expensive HOBO is the H08-001-02, which is about $59.00. This is a single channel HOBO that records just the temperature. It is not much larger than a box of matches, so you can tuck it anywhere inside the near space (NS) craft.

After recovering the mission, you download the temperature records from the HOBO and copy them into your spreadsheet into a new column. Align the temperature data with the MET data as closely as you can. This means that you need to program the HOBO using the time according to a GPS receiver.

Now you can create a chart of air temperature as a function of altitude. Because the air temperature in NS drops below the lower range of the HOBO (-4° F versus –60° F), it is best used to record temperatures inside the NS craft. However, you can still determine the altitude of the troposphere, because the interior temperature of the NS craft tracks the outside air temperature.

Another HOBO data logger is the H08-003-02 (about $85.00). This one records the air temperature and relative humidity. It makes more sense to record the relative humidity of the air outside of the NS craft than inside, so place the HOBO outside the NS craft and you'll have to live with the bottoming out of the air temperature data.

If you feel comfortable building your own sensors, then consider purchasing the H08-006-04, which costs about $95.00. This is a four external channel data logger. With it, you can record either current or voltage from four separate sensors. For example, CU Boulder, CO adds solar cells to their BalloonSats. These do not provide power for the BalloonSat, instead, the HOBO records the current generated by the solar panel during the mission.

As the light intensity increases in NS, the solar cells produce more current. The voltage and current limits of the HOBO are 2.5 volts and 20 mA. You can use sensors that create more than 20 mA or 2.5 V if you use a current or voltage divider in your sensor design.

HOBOs are programmed with the Box Car program (P/N BC3.7-ON, $14.00), which is purchased separately from the HOBO. I ran a test on my HOBO for this article. Here's what I discovered programming it. After installing the program, it created an icon in Onset Applications. A HOBO is connected to the comm port of a PC through a 1/8" jack. Your copy of Boxcar comes with this adapter cable.

Start the application and begin programming your HOBO by clicking LOGGER, then LAUNCH. First, look at the Battery Level gas gauge on the right side of the window. Don't launch a HOBO if the battery is about to die.

Give the deployment a name in the DESCRIPTION window. I recommend using the name of the flight. Select an interval. This is the time between measurements.

Measurements could be taken as often as every 1/2 second to as long as every nine hours (there is an option to create your own interval).

Each measurement of the HOBO requires one byte of memory. There is enough memory in the HOBO to record for hours or even days (this is called the duration). Here's a listing of selected intervals and durations.

1 sec	2 hr, 15 min
2 sec	4 hr, 30 min
10 sec	22 hr
15 sec	1 day, 9 hr
30 sec	2 days, 19 hr
60 sec	5 days, 15 hr

You can easily record data every two seconds for a NS mission, without running out of memory. However, if you do so, you'll have a lot of data to import to your spreadsheet. For those records that don't align with Tiny Trak posits, you'll have to interpolate the altitude of the measurement. This can get tedious if most of your data requires it. One option is to record measurements frequently, but to only copy measurements that align with the time stamps of the Tiny Trak. (*For more on processing Tiny Trak posits, see "Near Space" in the May 2004 issue of Nuts & Volts.*)

Select Advanced Options and make sure the wrap-around option *is not* clicked. If it turns out that your NS craft can't be recovered for a day or more, you do not want your flight data overwritten with measurements taken on the ground. Doing so just wastes the time, money, and effort you put into the mission.

It's best if you program the HOBO the night before launch. You can instruct the HOBO to delay recording measurements until a specified time. To do so, click on Delayed Start and then enter the date and time you want the HOBO to begin recording measurements. Be sure your PC clock is set to GPS time, as I believe the HOBO gets the current time from the PC it is being programmed on. This also lets you correlate HOBO records with Tiny Trak time stamps. The date field has the format of month/day/year.

Finally, you can select to Enable or Disable channels. Disabling used channels creates less data for you to import and increases the duration the HOBO can record data. When you are finished, click on the Start button.

After the mission, connect the HOBO to your PC and offload its data. To do this, click Logger, then Readout. Data from the HOBO will be offloaded. The results are stored as a file on your PC. Give the file a meaningful name so you can find it again later (again, I'd recommend naming it after the mission).

Boxcar can only display one channel of data at a time. To change channels, click View, Display Options, then Channel. Next, select the channel you want to look at. The results are displayed in a graph. If you're happy with the data, then export it to a test file or Excel spreadsheet. Click on File, then Export. From there, select either Microsoft Excel, Lotus 123, or Custom. By selecting Custom, you can export the data to a text file for editing before moving it to a spreadsheet.

Under Custom, I recommend the following settings. Under the Time/Settings, make the Date Format read "no date," as the mission occurred on a single day. The GPS does not indicate fractions of a second; its time is recorded in whole seconds. Therefore, it is only necessary to make the Time Format, Hr:Min:Sec.

Under Data Settings, select a Data Separator of Comma and select the units (channels) that were used on the mission. Now click the Export button. The resulting file contains data looking like this:

```
Time,Voltage (V) (*1),Voltage (V) (*2),Voltage (V) (*3),Voltage (V) (*4)

19:25:00,0.874,0.659,0.366,0.288
19:25:02,0.132,0.122,0.103,0.103
19:25:04,0.073,0.073,0.073,0.083
19:25:06,0.063,0.073,0.073,0.073
19:25:08,0.063,0.073,0.073,0.073
19:25:10,0.142,0.142,0.063,0.073
```

Open a text editor and copy the data that you want to keep into a spreadsheet. Once that data is formatted correctly, you can Copy and Paste the data from the new spreadsheet into the Tiny Trak posit spreadsheet.

After talking with Onset, I found out that they also make a pressure data logger that is good up to an altitude of 32,000 meters. This HOBO

The Thermochron. Photo courtesy of Maxim IC/Dallas Semiconductor.

is model number HPA and costs $249.00. You'll find Onset at **www.onsetcomp.com** Their website contains several other sensors suitable for the HOBO.

Thermochron

Another data logger is the Thermochron. Maxim IC purchased Dallas Semiconductor and currently sells their line of one wire devices. The Thermochron is a sealed, stainless steel device containing a clock, temperature sensor, memory, and battery. It's tiny — only about the size of five stacked dimes.

A Thermochron is programmed just like a HOBO. After installing the software, select iButton Viewer under the iButton-TMEX group. Ignore the Format Window and go straight to the Thermochron Viewer. Select the Wizard Tab. Click the NEXT button and set the time in the Thermochron. Select to set the Thermochron to the PC's clock (be sure to set your PC to the time on a GPS receiver). The funny thing is that I found the Thermochron's time to be more accurate than my laptop's clock.

The BS2pe.
Photo courtesy of Parallax, Inc.

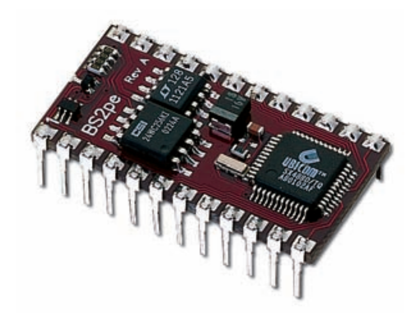

Click NEXT and skip setting an alarm. Click NEXT and set the Mission Start Delay. With the Thermochron, you must do a little math, as you set the delay in days, hours, and minutes from the time that you are doing the programming. You don't set the time to begin the mission. Do your math carefully and be sure to begin recording data before the expected launch time.

Click NEXT and set the sample rate. The shortest sample rate is once a minute. I find this is adequate for my missions. Click NEXT and do not set Temperature Alarms. Click NEXT and *do not* Enable Roll-Over. Click NEXT once more and then FINISH. You can now remove the Thermochron from its reader and load it onboard the NS craft.

After recovery, use the same software to download data from the Thermochron by clicking on the Mission Results tab. Here, click on the Read Data Button. After the data is downloaded, you can either generate a graph or export the results. Click either the Quick Graph button or the Export Result button.

After clicking the Export Results button, you'll be asked to give the resulting file a name. Again, use a meaningful name so you can find the file later. Be sure you stop the mission after you download the Thermochron's data, as there's no need to use the internal battery to collect more data when you don't need it. That's it. The results are similar to those of the HOBO.

Output from the Thermochron contains data not needed by the spreadsheet. Delete this information in a text editor. The resulting data looks like this:

```
Log Data
Format: [Time/Date , Temperature]
(Fahrenheit)
 08/03/2003 05:54 , 73.4°F
 08/03/2003 05:55 , 73.4°F
 08/03/2003 05:56 , 73.4°F
 08/03/2003 05:57 , 73.4°F
 08/03/2003 05:58 , 73.4°F
 08/03/2003 05:59 , 73.4°F
```

In WordPad, you'll want to delete all instances of the date. Then change the colon in the time file to a comma. You can also remove the extra space around the comma between the time and temperature by typing " , " in the Find What field and typing "," in the Replace With field.

Be sure to purchase a fob to hold the Thermochron, as it can easily get lost inside an NS craft. Also, since it's made from metal, place the Thermochron where it cannot short out the battery inside the module. It's a very bad sign when you see the NS craft climb out trailing a line of smoke.

Thermochrons are the ideal data logger if you want to compare the temperatures between objects of different colors or constructions. Each Thermochron has a unique ID printed on the case and this ID is displayed along with the measurements of Thermochron. Be sure to record which Thermochron ID went into which object being tested. You can purchase a Thermochron Starter Kit from Dallas-Maxim. The starter kit comes with the programming cable, a Thermochron, and memory. The programming software is free. The part number is DS1921K and costs $30.00. You will find information on the Thermochron starter kit at the Dallas/Maxim website: **www.maxim-ic.com**

Hitchhiker

More advanced users will want to design their own data loggers. The benefit here is that you can customize your data logger to fit any sensor you can design. After a visit to the Parallax office in December 2003, I developed an idea based upon input from Parallax's Ken Gracey. I'll develop this idea further and I will call them Hitchhikers.

The BASIC Stamp 2pe contains an additional 16 kb of EEPROM over the BS2p. It contains the same amount of scratch pad RAM as the BS2p, which allows you to record an entire GPS sentence for parsing at a later time. The BS2pe was designed with data loggers in mind. By purchasing a BS2pe and Board of Education (BoE), you can whip up a data logger that can be reconfigured mechanically and logically for each mission. The simplest Hitchhiker is programmed to record data at a fixed time interval. It requires a Push To Initiate button to tell it when to start recording. It is pushed just before the NS craft is released. This way, the time that data collection starts is known and no memory is wasted collecting data before launch.

The more advanced Hitchhiker shares the GPS output of the NS craft. Now, the altitude of the mission is recorded along with the results of experiments. Parallax sells a wide variety of App Mods for their BoE. Best of all, the code needed to integrate the App Mod into the BoE is available on their website. This dramatically reduces the time required to get a Hitchhiker ready for an NS mission.

One example of an appropriate App Mod is the SHT1X, a combined temperature and humidity sensor. The SHT1X can be mounted directly to the BoE or you can solder a cable to its pins before plugging it into the BoE. Using a cable allows the BoE to remain well inside the NS craft while letting the SHT1X sample the air outside.

More than App Mods are available. The texts for the BoE give instructions for creating several other sensors. I created a PCB for some of my past missions that is a light sensor based on LEDs. This lets one of my missions measure how sky brightness changed in blue and violet/near UV as the altitude increased. If you teach the Parallax microcontroller curriculum in a classroom, perhaps you can find a local amateur NS group that can fly a class project into NS. It's guaranteed to be easier and cheaper than getting a sounding rocket flight. This concept is new, so I have yet to fully develop it. Keep reading *Nuts & Volts* for developments. **NV**

Professional FM Stereo Radio Station

- ✔ **Synthesized 88-108 MHz with no drift**
- ✔ **Built-in mixer - 2 line inputs, 1 mic input**
- ✔ **Line level monitor output**
- ✔ **High power version available for export use**

The all new design of our very popular FM100! Designed new from the ground up, including SMT technology for the best performance ever! Frequency synthesized PLL assures drift-free operation with simple front panel frequency selection. Built-in audio mixer features LED bargraph meters to make setting audio a breeze. The kit includes metal case, whip antenna and built-in 110 volt AC power supply.

FM100B	**Super-Pro FM Stereo Radio Station Kit**	**$269.95**
FM100BEX	**1 Watt, Export Version, Kit**	**$349.95**
FM100BWT	**1 Watt, Export Version, Wired & Tested**	**$429.95**

Professional 40 Watt Power Amplifier

- ✔ **Frequency range 87.5 to 108 MHz**
- ✔ **Variable 1 to 40 watt power output**
- ✔ **Selectable 1W or 5W drive**

At last, the number one requested new product is here! The PA100 is a professional quality FM power amplifier with 30-40 watts output that has variable drive capabilities. With a mere one watt drive you can boost your output up to 30 watts! And this is continuously variable throughout the full range! If you are currently using an FM transmitter that provides more than one watt RF output, no problem! The drive input is selectable for one or five watts to achieve the full rated output! Features a multifunction LED display to show you output power, input drive, VSWR, temperature, and fault conditions. The built-in microprocessor provides AUTOMATIC protection for VSWR, over-drive, and over-temperature. The built-in fan provides a cool 24/7 continuous duty cycle to keep your station on the air!

PA100	**40 Watt FM Power Amplifier, Assembled & Tested**	**$599.95**

Synthesized Stereo FM Transmitter

- ✔ **Fully synthesized 88-108 MHz for no drift**
- ✔ **Line level inputs and output**
- ✔ **All new design, using SMT technology**

Need professional quality features but can't justify the cost of a commercial FM exciter? The FM25B is the answer! A cut above the rest, the FM25B features a PIC microprocessor for easy frequency programming without the need for look-up tables or complicated formulas! The transmit frequency is easily set using DIP switches; no need for tuning coils or "tweaking" to work with today's 'digital' receivers. Frequency drift is a thing of the past with PLL control making your signal rock solid all the time - just like commercial stations. Kit comes complete with case set, whip antenna, 120 VAC power adapter, 1/8" Stereo to RCA patch cable, and easy assembly instructions - you'll be on the air in just an evening!

FM25B	**Professional Synthesized FM Stereo Transmitter Kit**	**$139.95**

Tunable FM Stereo Transmitter

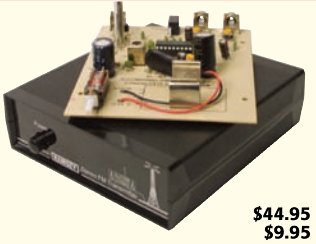

- ✔ **Tunable throughout the FM band, 88-108 MHz**
- ✔ **Settable pre-emphasis 50 or 75 µSec for worldwide operation**
- ✔ **Line level inputs with RCA connectors**

The FM10A has plenty of power and our manual goes into great detail outlining all the aspects of antennas, transmitting range and the FCC rules and regulations. Runs on internal 9V battery, external power from 5 to 15 VDC, or an optional 120 VAC adapter is also available. Includes matching case!

FM10C	**Tunable FM Stereo Transmitter Kit**	**$44.95**
FMAC	**110VAC Power Supply for FM10A**	**$9.95**

Professional Synthesized AM Transmitter

- ✔ **Fully frequency synthesized, no frequency drift!**
- ✔ **Ideal for schools**
- ✔ **Microprocessor controlled**

Run your own radio station! The AM25 operates anywhere within the standard AM broadcast band, and is easily set to any clear channel in your area. It is widely used by schools - standard output is 100 mW, with range up to ¼ mile, but is jumper settable for higher output where regulations allow. Broadcast frequency is easily set with dip-switches and is stable without drifting. The transmitter accepts line level input from CD players, tape decks, etc. Includes matching case & knob set and AC power supply!

AM25	**Professional Synthesized AM Transmitter Kit**	**$99.95**

Tunable AM Transmitter

- ✔ **Tunes the entire 550-1600 KHz AM band**
- ✔ **100 mW output, operates on 9-12 VDC**
- ✔ **Line level input with RCA connector**

A great first kit, and a really neat AM transmitter! Tunable throughout the entire AM broadcast band. 100 mW output for great range! One of the most popular kits for schools and scouts! Includes matching case for a finished look!

AM1C	**Tunable AM Radio Transmitter Kit**	**$34.95**
AC125	**110VAC Power Supply for AM1**	**$9.95**

Mini-Kits...
The Building Blocks!

Tickle-Stick

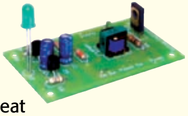

The kit has a pulsing 80 volt tickle output and a mischievous blinking LED. And who can resist a blinking light! Great fun for your desk, "Hey, I told you not to touch!" Runs on 3-6 VDC

TS4	**Tickle Stick Kit**	**$12.95**

Super Snoop Amplifier

Super sensitive amplifier that will pick up a pin drop at 15 feet! Full 2 watts output. Makes a great "big ear" microphone. Runs on 6-15 VDC

BN9	**Super Snoop Amp Kit**	**$9.95**

Dripping Faucet

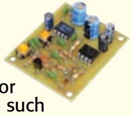

Produces a very pleasant, but obnoxious, repetitive "plink, plink" sound! Learn how a simple transistor oscillator and a 555 timer can make such a sound! Runs on 4-9 VDC.

EDF1	**Dripping Faucet Kit**	**$9.95**

LED Blinky

Our #1 Mini-Kit for 31 years! Alternately flashes two jumbo red LED's. Great for signs, name badges, model railroading, and more. Runs on 3-15 VDC.

BL1	**LED Blinky Kit**	**$7.95**

Touch Tone Decoder

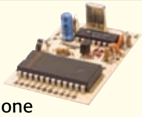

Strappable to detect any single DTMF digit. Provides a closure to ground up to 20mA. Connect to any speaker, detector or even a phone line. Runs on 5 VDC.

TT7	**DTMF Decoder Kit**	**$24.95**

Electronic Siren

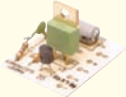

Produces the upward and downward wail of a police siren. Produces 5W output, and will drive any speaker! Runs on 6-12 VDC.

SM3	**Electronic Siren Kit**	**$7.95**

Universal Timer

Build anything from a time delay to an audio oscillator using the versatile 555 timer chip! Comes with lots of application ideas. Runs on 5-15 VDC.

UT5	**Universal Timer Kit**	**$9.95**

Voice Switch

Voice activated (VOX) provides a switched output when it hears a sound. Great for a hands free PTT switch, or to turn on a recorder or light! Runs on 6-12 VDC and drives a 100 mA load.

VS1	**Voice Switch Kit**	**$9.95**

Tone Encoder/Decoder

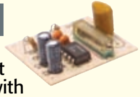

Encodes OR decodes any tone 40 Hz to 5KHz! Add a small cap and it will go as low as 10 Hz! Tunable with a precision 20 turn pot. Runs on 5-12 VDC and will drive any load up to 100 mA.

TD1	**Encoder/Decoder Kit**	**$9.95**

RF Preamplifier

Super broadband preamp from 100 KHz to 1000 MHz! Gain is greater than 20dB while noise is less than 4dB! 50-75 ohm input. Runs on 12-15 VDC.

SA7	**RF Preamp Kit**	**$19.95**

Touch Switch

Touch on, touch off, or momentary touch hold, your choice! Uses CMOS technology. Runs on 6-12 VDC and drives any load up to 100 mA.

TS1	**Touch Switch Kit**	**$9.95**

The Latest Hobby Kits!

Where The Fun Always Starts!

Phone Patch Mixer

NEW!

- ✔ **Send telephone calls over-the-air!**
- ✔ **Stereo line/mic/phone line mixer!**
- ✔ **Automatic gain, noise gating & compression!**

This is a perfect match to any of our AM or FM broadcasters! Sure it's easy to plug a music source into any of them, but when you want to add a microphone (after all, you ARE the Disc Jockey of your station!) or if you want to put incoming phone calls on-the-air and properly mix them together, it becomes difficult! Not anymore with the PPM3. All three audio inputs can be easily mixed together and put onto the Line output for feeding into any of our transmitter kits!

Simply plug your microphone, phone line, phone handset, and stereo line level program source into the PPM3. Connect the output to your AM or FM broadcaster's line level input and you're all set! Separate independent automatic noise gating and automatic variable gain and compression circuits are used for both the telephone line audio and microphone inputs to assure a great sounding line output! The stereo line level mixer features mono injection of phone line and microphone audio for equal balance. Powered by 9-15VDC. Now when those people call complaining about YOU, put THEM on-the-air!

PPM3C	**Phone Line Interface/Mixer Kit With Case**	**$69.95**
AC125	**110VAC Power Adapter**	**$9.95**
PPM3WT	**Factory Assembled & Tested PPM3C With Case & PS**	**$99.95**

Electronic Cricket Sensor

NEW!

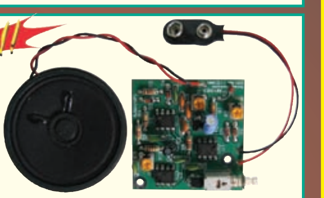

- ✔ **Chirps like a real cricket!**
- ✔ **Senses temp & changes chirp accordingly!**
- ✔ **You can determine actual temp by chirps!**
- ✔ **Runs on 9VDC**

Sounds just like those little black critters that seem to come from nowhere and annoy you with their chirp-chirp! But like the little critters, we made it sensitive to temperature so when it gets warmer, it chirps faster! That's right, you can even figure out the temperature by the number of chirps it generates! Just count the number of chirps over a 15 second interval, add 40, and you have the temperature in degrees Fahrenheit!

Not as fancy as a digital thermometer, but not as unique either! And unlike its little black predecessor, the ECS1 operates from around 50°F to 90°F! I don't think there are too many real crickets chirping away at 90°F! A unique thermistor circuit drives a few 555 IC's providing a variable chirp that is guaranteed to annoy everyone around you! But just watch their faces when you tell them the temperature outside!

Runs on 9-12VDC or a standard 9V battery (not included). Includes everything shown, including the speaker and battery clip, to make your cricket project a breeze. But don't step on it when it starts chirping...voids the warranty!

ECS1	**Electronic Cricket Sensor Kit**	**$24.95**

Ion Generator

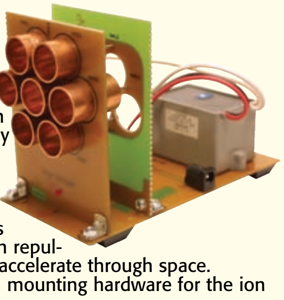

- ✔ **Negative ions with a blast of fresh air!**
- ✔ **Generates 7.5kV DC negative at 400µA**
- ✔ **Steady state DC voltage, not pulsed!**

This nifty kit includes a pre-made high voltage ion generator potted for your protection, and probably the best one available for the price. It also includes a neat experiment called an "ion wind generator". This generator works great for pollution removal in small areas (Imagine after Grandpa gets done in the bathroom!), and moves the air through the filter simply by the force of ion repulsion! Learn how modern spacecraft use ions to accelerate through space. Includes ion power supply, 7 ion wind tubes, and mounting hardware for the ion wind generator. Runs on 12 VDC.

IG7	**Ion Generator Kit**	**$64.95**
AC125	**110VAC Power Supply**	**$9.95**

Electrocardiogram Heart Monitor

- ✔ **Visible & audible display of your heart rhythm**
- ✔ **Re-usable sensors included!**
- ✔ **Monitor output for your scope**
- ✔ **Simple & safe 9V battery operation**

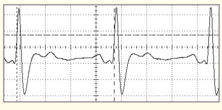

Enjoy learning about the inner workings of the heart while at the same time covering the stage-by-stage electronic circuit theory used in the kit to monitor it. The three probe wire pick-ups allow for easy application and experimentation without the cumbersome harness normally associated with ECG monitors. Operates on a standard 9VDC battery. Includes matching case for a great finished look. The ECG1 has become one of our most popular kits with hundreds and hundreds of customers wanting to get "Heart Smart"!

ECG1C	**Electrocardiogram Heart Monitor Kit With Case**	**$44.95**
ECG1WT	**Factory Assembled & Tested ECG1**	**$89.95**
ECGP10	**Replacement Reusable Probe Patches, 10 Pack**	**$7.95**

Check Out What's New! For 2004!

COMMUNICATIONS SERVICE MONITOR

NEW!

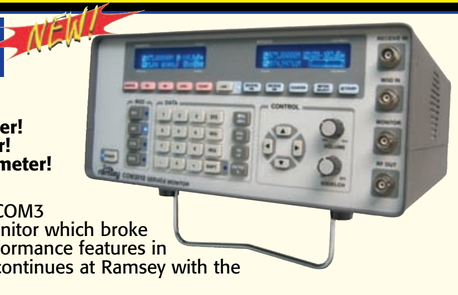

- ✔ **100KhZ TO 1.0GHz!**
- ✔ **Built-in power meter!**
- ✔ **Built-in frequency counter!**
- ✔ **Built-in sweep generator!**
- ✔ **Built-in calibrated RSSI meter!**
- ✔ **RS232 control**

In 1986 we introduced the COM3 Communications Service Monitor which broke the $2K price barrier for performance features in the $10K units! The legacy continues at Ramsey with the brand new COM3010!

It's our full duplex service monitor designed from the ground up to give you features and performance at a price that can't be beat! Covering a broadband spectrum of 100kHz all the way up to 1.0GHz at 0.1ppm accuracy, the COM3010 boasts a full compliment of built-in features. This includes a power meter with a 100W dummy load, SINAD meter, frequency counter, sweep generator, calibrated RSSI meter, RS232 control and Li-Ion battery operation. Foolproof design automatically switches any RF power mistakenly keyed into the signal generator input directly to the dummy load! No more fried front ends!

The COM3010 receives and displays both AM and FM modulation. The signal generator also provide both AM/FM modulation with internal and external sources, and generates CTS and DPL tone squelch tones. The built-in frequency counters measure and display RF from 100kHz to 1GHz and audio from 60Hz to 3KHz. The entire service monitor weighs only 14 lbs for easy travel. Includes one Li-Ion battery pack to provide 1 hour of operation. Two additional battery packs may be added to extend life to 3 hours. Visit www.ramseytest.com for details.

COM3010	**Communications Service Montior, 100kHz-1GHz**	**$4795.00**
BP3010	**Additional Li-Ion Battery Pack (Max 3 Packs)**	**$64.95**
CC3010	**Matching Black Padded Cordura Carrying Case**	**$129.95**

The Bullshooter-II Digital Voice Recorder

NEW!

- ✔ **Multiple message storage & selection!**
- ✔ **Full function controls with 7 seg display!**
- ✔ **Variable output levels for any equipment!**
- ✔ **Perfect for hold messages, broadcast announcements, and much more!**

The BS2 provides up to 4 minutes of digital voice storage. That can be broken down in a maximum of 9 separate stored messages. The message number is displayed on the 7 segment LED front panel display! Recording/playing/stopping is similar to a standard recorder. You can start, stop/pause your message during both record and playback! Now you can have separate and distinctive messages to fit various applications...or even different sponsors!

The BS2 has a built-in, highly sensitive electret condenser microphone for recording your voice messages. However, you can also plug in an external microphone and even an external line level input for that professional studio sounding recording. External inputs also feature variable level controls to optimize your recording!

Playback-wise, the BS2 features adjustable line level outputs (two mono outputs for stereo inputs) to properly feed any application! This is perfect for telephone system announcements on hold (MOH source), radio broadcasters, transmitters, and audio/visual displays. You can also directly drive a speaker with the built-in amplified speaker output and monitor the levels with the built-in headphone jack. Whatever your application is, the new BS2 has you covered! Runs on 12-15VDC.

BS2C	**Bullshooter-II Digital Voice Recorder Kit With Case**	**$69.95**
AC125	**110VAC Power Supply**	**$9.95**
BS2WT	**Factory Assembled & Tested BS2 With Case & PS**	**$99.95**

MORE than just friendly on-line ordering!

Clearance Specials, Ramsey Museum, User Forums, Dealer Information, FAQ's, FCC Info, Kit Building Guides, Downloads, Live Weather, Live Webcams, and much more!

www.ramseykits.com

800-446-2295

ramsey electronics inc.

590 Fishers Station Drive
Victor, NY 14564
(800) 446-2295
(585) 924-4560

Where Electronics Is Always FUN!

- ✦ *Build It!*
- ✦ *Learn It!*
- ✦ *Achieve It!*
- ✦ *Enjoy It!*

Prices, availability, and specifications are subject to change. Visit www.ramseykits.com for the latest pricing, specials, terms and conditions.

Circle #82 on the Reader Service Card.

Basics For Beginners

Just For Starters

Starting a New Design — Part 1: Architecture and Implementation

You came up with the solution to a problem and decided to build it yourself. How do you get started? Starting a new design on a blank sheet of paper can be difficult. The basic challenge is to analyze the features that you want to implement and determine what type of circuit is called for to perform each task. This is the essence of system architecture: translating high level requirements into a system block diagram.

Developing a system architecture requires a broad knowledge base so that you can trade off the benefits and drawbacks of different implementation strategies. Such knowledge comes from experience and self education. (Like fine wine, we hope to get better with time!) Some functions are best solved by analog or digital circuitry or by a combination of the two. You can develop skills to break a problem down into its component parts and then conceive of implementations for those small sections.

In this first installment of a two part series, we'll walk through a small project scenario to see how to go from concept through design. The first step is translating project requirements into an architectural organization. Implementations using both analog and digital approaches are then presented and compared. Next month's article will discuss how designs are implemented with state machines and microcontrollers.

Identifying the Requirements

To get started on a project idea, let's say that you want to make an LED blink. What does blink mean? Do you just want a simple on/off at a fixed frequency and duty cycle? Do you want a repeating pattern of some sort? Do you want the blink rate or duty cycle to change based on some inputs (e.g., switches)? These types of questions figure prominently into the architecture of an LED blinking circuit. We can begin by examining the simplest case: a fixed frequency and duty cycle blinking LED. Let's arbitrarily choose a 2 Hz blink rate (twice per second) and a 25% duty cycle. The blinking period is the inverse of the frequency: T = 1/F = 500 milliseconds (ms). A 25% duty-cycle means that the LED is on for one quarter of each period: T_{ON} = 125 ms and T_{OFF} = 375 ms. It is worth noting that the required accuracy is not high. If the LED is on for 119 ms instead of 125 ms, no great harm will occur. In situations where high accuracy is required, this is a critical requirement that drives system architecture.

Figure 1. LED Blinker Block Diagram

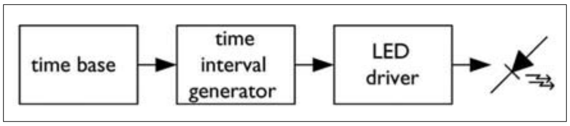

Figure 2. Blinking LED with an LM555

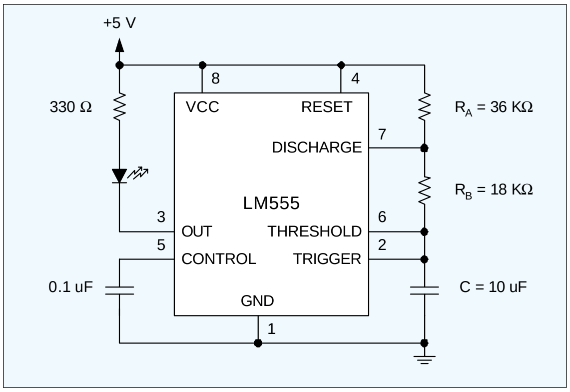

Architectural Definition

Upon completing the requirements phase, the question becomes what is the best way to generate a control signal that repeats with the pattern, "on for 125 ms and off for 375 ms." The first architectural need that surfaces is a time-base. Some sort of time keeping mechanism is necessary to provide consistent operation. Closely related to the time-base is a mechanism to convert the time-base into our required "on" and "off" intervals.

Figure 1 shows a simple block diagram for our LED blinker. Realizing that an architectural diagram may not translate directly into a circuit with a discrete component for every box is important. Rather, specific implementations may merge or further subdivide the architecture's logical building blocks. A circuit component may perform multiple features or it may perform only part of a feature. This variable mapping will become apparent as we discuss various solutions to the problem.

An Analog Approach

An LM555 timer integrated circuit (IC) can generate a repetitive on/off signal, as shown in Figure 2. (If you want to read more about the LM555's operation, visit appropriate manufacturers' websites, such as **www.fairchildsemi.com** or **www.national.com**) The LM555 implements all three architectural features: time-base, interval generation, and LED driving. Better yet, this analog circuit can be built for less than $1.00 and requires just the LED, three resistors, two capacitors, and the LM555 itself. R_A and R_B establish the blink rate and duty-cycle:

$$\text{Blink rate (Hz)} = \frac{1.44}{(R_A + 2R_B)\,C}$$

$$T_{ON}\ \text{(LM555 output low)} = 0.693\,R_B C$$

$$T_{OFF}\ \text{(LM555 output high)} = 0.693\,(R_A + R_B)C$$

$$\text{Duty cycle (\%)} = 100\%\ \text{x}\ \frac{T_{ON}}{T_{ON} + T_{OFF}}$$

The LM555 relies on RC time constants. Keep in mind that a capacitor's finite leakage current can cause trouble in very long time, constant circuits. As the calculated charge/discharge currents get smaller, leakage current introduces more error than with the more rapid charging and discharging of shorter time constants.

Digital Logic

Despite having come up with a simple and cheap analog circuit, let's investigate a digital solution. Digital — in this context — refers to synchronous digital logic: clocks, flip-flops, and logic gates. More information on synchronous logic, clocks, and Boolean logic can be found in my book, *Complete Digital Design*. Synchronous logic inherently requires a time-base, or clock, to function, which is one of the basic elements in our architectural diagram (Figure 1). The clock determines the unit of time that the logic operates on. Next, a counter circuit counts time units, or clock pulses, and determines when to turn the LED on and off.

One always wants to minimize circuit complexity, which translates to smaller counters in this example. Since the counter needs to count out 125 and 375 ms time intervals, the counter will be smaller if the clock runs at a lower frequency. To take an extreme case: if the clock period is 125 ms (8 Hz), the counter would need to count just one clock for T_{ON} and three for T_{OFF}. The reality is that a digital clock oscillator will run much faster than 8 Hz, but the idea is to pick the lowest practical clock frequency.

Figure 3. Blinking Counter Implementations with 32.768 kHz Clock

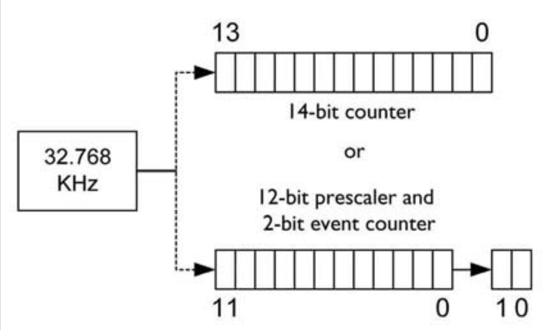

Counter Implementations

Most digital clock oscillators are found in the MHz range because typical microprocessors and logic circuits operate at high speeds. However, 32.768 kHz oscillators can be found in many electronics catalogs. The two general solutions to implementing the counter with a 32.768 kHz clock are illustrated in Figure 3. One is to construct a single counter that can count the full blinking period — 500 ms, in our case. With 32,768 cycles per second, the counter must count 16,384 cycles to cover 500 ms. That's a 14-bit binary counter that counts from zero to 16,383 and then rolls back to zero.

The alternative is to construct two smaller counters: a prescaler and an event counter. The prescaler generates the ideal 8 Hz frequency mentioned previously. This allows

Figure 4. Counter Decoder Logic

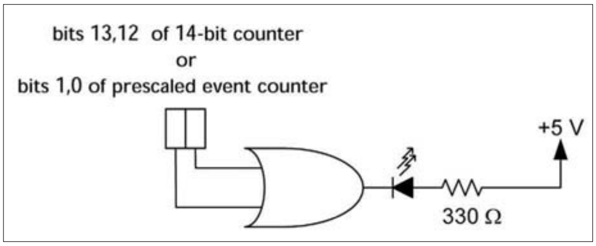

a smaller event counter to blink the LED on and off. In our case, the prescaler is a 12-bit counter because $2^{12} = 4,096$ and 32,768/4,096 kHz is 8 Hz. A two-bit event counter counts a single cycle for T_{ON}, three for T_{OFF}, and then restarts at zero.

You may wonder why a prescaler is useful, since there are still 14 counter bits in total. Prescalers can simplify a design by breaking a large counter into smaller counters. The total amount of counter logic with a prescaler is generally less than with a single large counter. In our example, the point may be moot depending on your components and implementation technology. More general problems, however, can be simplified with a prescaler.

Blinker Logic

Now that the counter problem has been solved, we need to convert the counter output into a blinking LED. With or without the prescaler, two counter bits are decoded, as shown in Figure 4. With the prescaler, the two-bit event counter feeds an OR gate. Without the prescaler, the two most significant bits of the counter feed the OR gate. In both implementations, these two bits increment every 125 ms. The OR gate drives a zero output when both input bits are zero and otherwise drives a one output. The LED is connected through a current-limiting resistor to turn on when the OR gate drives a zero output. (This is because commonly used TTL devices can sink more current during a zero output than they can source during a one output.)

Analog Versus Digital

The digital circuit is more complex than the analog circuit, but there are no time constant accuracy problems with longer blinking periods. Longer periods require larger counters, however, which add their own complexity. You don't get something for nothing!

Aside from the basic issue of longer or shorter blinking periods, which circuit is best when more special effects are called for? How would a multi phase pattern be implemented, such as, "quick blink, pause, slow blink, pause, repeat?" The LM555 circuit can be modified to dynamically alter its time constants, but the additions can quickly get complicated.

The digital circuit, while initially more complex, is more easily augmented because arbitrary counter decode logic can be added. Any of the counter bits may be used to form complex blinking patterns. Next month's article will address more complex counter decoding and will take digital design a step further into the realm of microcontrollers, where flexibility becomes even greater. **NV**

About the Author

Mark Balch is the author of *Complete Digital Design* (see **www.completedigitaldesign.com**) and works in the Silicon Valley high-tech industry. His responsibilities have included PCB, FPGA, and ASIC design. He has designed products in the fields of telecommunications, HDTV, consumer electronics, and industrial computers. In addition to product design, Mark participates in industry standards committees and has presented work at technical conferences. He holds a bachelor's degree in electrical engineering from The Cooper Union in New York City. He can be reached via Email at **mark@completedigitaldesign.com**


Test & measurement equipment
on eBay? *Of course!*
www.ebaybusiness.com
ebay Business


Bus Embedded Internet I²C RTOS CAN Bus Embedded Internet I²C RTOS CAN
CCS C Compiler
For the PIC® MCU
262-797-0455
www.ccsinfo.com/env

EARTHLCD.COM
See the World's Largest Collection of LCDs and LCD Products


Your BASIC Stamp Headquarters
PARALLAX
www.parallax.com

USB Add USB to your next project— it's easier than you might think!
DLP Design
• USB-FIFO • USB-UART • USB/Microcontroller boards
Absolutely NO driver software development required!
www.dlpdesign.com Design services available


ramsey
www.ramseykits.com
AM/FM Broadcasters • Hobby Kits
Learning Kits • Test Equipment
...AND LOTS OF NEAT STUFF!

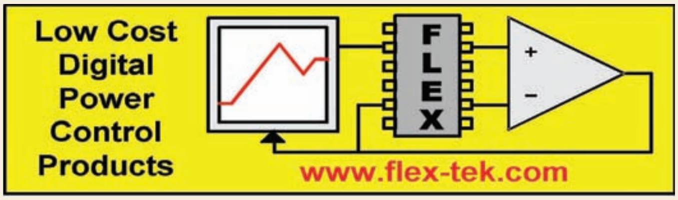
Low Cost Digital Power Control Products
FLEX
www.flex-tek.com

www.gatewayelectronics.com
(Electronically Speaking, Gateway's Got It!)
MAIL ORDERS CALL TOLL-FREE-1-800-669-5810


USB/Serial Pic Programmer Kit $34.95
* Free software and updates Windows 9x/2000/Nt/XP
* Quality PCB and Silkscreen for easy assembly
See all of our Educational Electronic Kits
visit us at www.ElectronicKits.com


World's Smallest Ethernet Web Server
www.netmedia.com

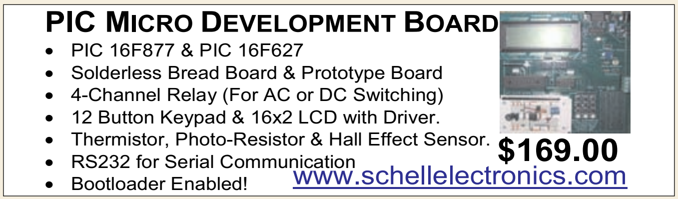
PIC MICRO DEVELOPMENT BOARD
- PIC 16F877 & PIC 16F627
- Solderless Bread Board & Prototype Board
- 4-Channel Relay (For AC or DC Switching)
- 12 Button Keypad & 16x2 LCD with Driver.
- Thermistor, Photo-Resistor & Hall Effect Sensor.
- RS232 for Serial Communication
- Bootloader Enabled!
$169.00
www.schellelectronics.com

www.CircuitSpecialists.com
OVER 8,000 ELECTRONIC ITEMS ONLINE!
Deals You Won't Believe!

HILLTRONIX
YOU CAN CLICK ON US WITH CONFIDENCE!
Protek, Extech,
& Probe Master
hilltronix.com

www.speechchips.com
Speech Synthesizer IC's
Magnevation SpeakJet
GI SP0256-AL2
Use w/ PC's, PICMicro,
Basic Stamps & OOPIC

HSC Electronic Supply
▸▸ www.halted.com ◂◂

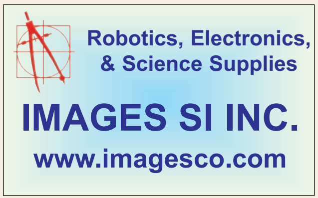
Robotics, Electronics,
& Science Supplies
IMAGES SI INC.
www.imagesco.com

MCUmart.com
PICmicro MCU Development Tools
BASIC Compilers
Device Programmers
Prototyping Boards
Experimenter Boards
Books

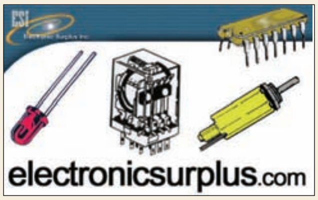
CSI
electronicsurplus.com


ONE PASScircuit™
From only
$6.95
+S&H
www.onepasinc.com

Understanding, Designing, and Constructing Robots and Robotic Systems

Transistors as Digital Switches

An Example Using Miniature R/C Racing Cars for Data Transmission

Often, we need our robot to make or break a circuit. This lets our robot operate a sensor, emit a warning tone, or even fire photon torpedoes. While we humans are really great at pushing buttons, robots have a problem because they tend to lack fingers and opposable thumbs. So just how do robots turn on and off circuits?

If the circuit requires minimal power (say five volts at 10 milliamps), then the robot's microcontroller can often power the circuit itself. In the case where power requirements are just too high for the robot's brain, we usually rely on things like relays, SCRs, and transistor switches.

These devices are like levers. It requires very little power to switch on a relay, SCR, or transistor, but they can source or sink large amounts of power. This article explains how you can use transistors to operate a radio transmitter and receiver. You're going to hack the guts of an R/C car and turn it into a wireless link for robots.

Earlier this year, I purchased a single channel R/C airplane and experimented with modifying its radio for a robot project. The hack went well and, eventually, I put the radio to work at 85,000 feet (see my article in this month's *SERVO Magazine*). However, I saw one problem with the radio; it's a single channel radio (with a very slow baud rate). This is fine for projects were robots only transmit small packets, like a nibble of data.

To add more capability to my cheap wireless hack, I decided to use a radio with more channels. I found an inexpensive solution in an advertisement from Cyberguys (**www.cyberguys.com**). They were selling miniature R/C racing cars that were similar to the Zip Zaps sold at RadioShack (Figure 1).

Removing the Transmitter and Receiver

The cars are about 2" x 1" x 1". After prying off the body and cover for the receiver (be careful that you don't pull off the wire antenna), I found a 3/4" x 3/4" circuit board containing the radio receiver and drive electronics. In addition, the car has a pager motor, rechargeable 1.2 volt N-cell, and super magnet. These leftover parts are ideal for BEAM robotics projects.

Removing the circuit board from the car requires that you unsolder wires from six pads. You can cut the wires, but I recommend unsoldering them. The solder pads are small, so the work goes quick. Two of the wires to unsolder are very fine magnet wire and the rest are more substantial.

The transmitter has a larger PCB measuring 2" x 3". My radio was crystalled for 45 MHz, but three other frequencies are available. If you forget your transmitter's frequency, you'll find it stamped on its crystal. The 45 MHz band is legal for all R/C applications. Other frequencies are also legal for all R/C applications, except for the 75 MHz band, which cannot be used for aircraft. Be aware of this if you plan to hack an R/C model for use in an aerobot.

Now, we'll remove the transmitter from its plastic case. The transmitter's antenna screws into a socket in the transmitter's case and is electrically connected to the top of the PCB with a thin gray wire. Remove the small screw that secures the antenna socket to the case. There are a couple of screws to remove to get the transmitter PCB free of the case. Finally, cut the wires to free the PCB from the battery holder.

Now that the transmitter and

Figure 1. Miniature R/C cars. Image courtesy of Cyberguys.

receiver have been removed, it's time to make their microcontroller interface boards. You will need the following parts to complete this project. The perfboard — RadioShack P/N 276-170 — is a general-purpose board, while the 276-168 replicates a breadboard.

To hack the transmitter and receiver, you'll need to solder wires to the transmitter and receiver printed circuit boards. Then you'll assemble the interface boards on perfboard. After that, you'll solder the wires from the transmitter and receiver to the interface boards you just assembled. Then, you'll terminate the wires from the interface boards so they can connect to your robot controller. Finally, you'll need to modify and download the software I wrote to operate the radios (available on the *Nuts & Volts* FTP library at **www.nutsvolts.com**). The entire process takes an afternoon, so it's a good way to get away from the television.

Figure 2. Three channel receiver schematic.

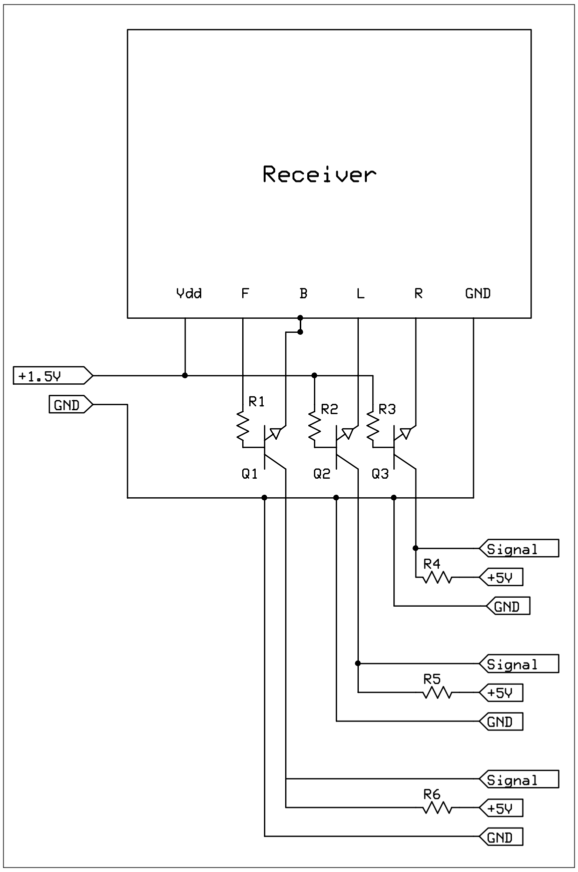

Modifying the Receiver

Figure 2 shows the schematic for what you're about to do to the receiver, while the physical layout I used is illustrated in Figure 3. Feel free to modify this as you see fit. After making two receiver interface boards with perfboard, I designed a printed circuit board. A copy of the copper foil pattern is also available on the *Nuts & Volts* website.

Begin modifying the receiver by placing a fresh bead of solder on all six solder pads of the receiver board. Note that each solder pad is labeled. Nine wires are required to connect the receiver PCB to the interface board, three wires to the Vcc pad, two to the GND pad, and one each to the L, R, F, and B pads.

I used green for ground and red for positive voltage (Vcc). The solder pads labeled L and R are connections to ground, so I selected a black wire for these solder pads. The polarity of the two remaining solder pads depends on the direction you drive the R/C car. We're interested in when the voltage of the F solder pad is positive compared to the voltage of the B solder pad. I recommend using a bright color for the F solder pad and black for the B solder pad.

Cut nine stranded, #24 AWG wires about 12" long and strip about 1/4" of insulation from one end of the L, R, F, and B wires and tin them. Then snip the tinned ends to a length of about 1/8". Clean and tin the tip of your soldering iron. Place each wire in contact with its solder pad and apply heat with a soldering iron and they'll solder together without additional solder.

Strip about 1/2" of insulation from one end of the Vcc and GND wires. Twist the three Vcc wires together and solder them. Next, twist the two GND wires together and solder them. Trim the tinned ends to less than 1/4" long. Clean and tin your soldering iron again. Place the soldered wires in contact with their proper solder pads and heat them until they are soldered to their solder pads.

Use one each of the Vcc and GND wires to solder a single cell AA or AAA holder to the receiver. Don't forget to slide a length of heat shrink tubing over the wires first. To get a single AAA battery holder, I cut a two-cell holder down the middle. It didn't save any money, but did save a little volume. You can now set the receiver printed circuit board aside to work on its interface board.

Using the layout in Figure 2, I was able to make the receiver interface board only 1-1/4" by 1-3/4" in size using the 276-170 perfboard. Before you begin cutting your perfboard or soldering your first component, place all the components into the perfboard and make sure they fit well.

The thin lines on the perfboard in my diagram represent the jumper wires and the thicker lines represent #24 AWG stranded wire. For the jumper wires between traces, use the clipped leads of the resistors (waste not, want not).

There are four jumper wires in my diagram ending in the letter G. These are ground wires and must be connected together. I made the connections with a copper trace on the underside of the perfboard, which doesn't show in my diagram. These jumpers connect the ground of the receiver circuit to the ground of the robot controller.

When you're happy with the placement of parts, trim the perfboard and sand the raw edges smooth. You can begin soldering components into the perfboard. I find that a short strip of masking tape is very useful for holding components in place when I flip the board over. Trim the leads after soldering and check for shorted traces. Now, you're ready to connect the interface board to the receiver.

It's best if each wire in the cable connecting the interface board to the receiver board has a strain relief (see Figure 6). I make a strain relief by enlarging a hole in the perfboard until an insulated wire can pass through it. The wire passes through the enlarged hole and then bends over where it is soldered to the perfboard. Now, if the wire is tugged, friction between the wire's insulation and the hole reduces the chances of the wire being pulled loose from its soldered connection.

Cut the seven remaining wires from the receiver circuit board to the same length and strip some insulation from the ends. Pass the wires through their strain relief holes, bend, and solder them to the perfboard.

Solder the wire from the F and the remaining two wires from the Vcc solder pads to the three resistors (R1, R2, and R3). Solder the wires from the B, L, and R pads to the emitters of the three transistors (the rightmost transistor lead in the diagram). The last wire from the ground solder pad is soldered to the ground jumpers (labeled with a G in my diagram). Remember, this connection is not made to the transistors, it's made to the microcontroller.

This is all that is needed to connect the interface board to the receiver. Now you can connect the interface board to the microcontroller.

Cut three red, three black, and three white wires all to a length of six inches and strip some insulation from one end of each wire. Determine which holes you want to use as a strain relief and enlarge them slightly. Bend the wires back and through their strain relief holes in the perfboard. Solder the red wires to the pull-up resistors, the black wires to the ground jumpers, and the white wires to the transistor collectors.

Terminate the wires in any manner appropriate for your robot controller. I personally use a three-pin male header because of the design of the expansion ports in my robot controllers. To terminate the ends of my wires, I tin the stripped ends. Next, I cut a three pin length of male header, tin the short leads, and slide a short length of thin heat shrink over the end of each wire. After holding the tinned wire in contact with the header pin, I apply a soldering iron and solder the two together. I repeat this to the remaining two pins. I finish the header by sliding the heat shrink over the soldered connection and shrinking it.

To make the hack more durable, mount the perfboard and receiver circuit board to a base. I zip tied mine to a sheet of correplast (corrugated plastic). You'll find the 1/8" thick Sintra (foamed PVC) just as easy to work with. I filled the gap between the perfboard and correplast with a sheet of foamed neoprene, sold at craft and hobby stores.

Holding everything together, I punched holes through the correplast for the zip ties. The neoprene compresses slightly under the force of the zip tie, creating a barrier that loose wires cannot get under and short circuit. I also zip tied the receiver antenna and all the wires to the same base. Zip ties holding the wires (cables, actually) forms a second strain relief.

Modifying the Transmitter

Figure 4 shows the schematic for what you're about to do to the transmitter, while the physical layout I used for the transmitter is illustrated in Figure 5. Again, please feel free to modify the design as you see fit. After

Figure 4. Mini R/C transmitter schematic.

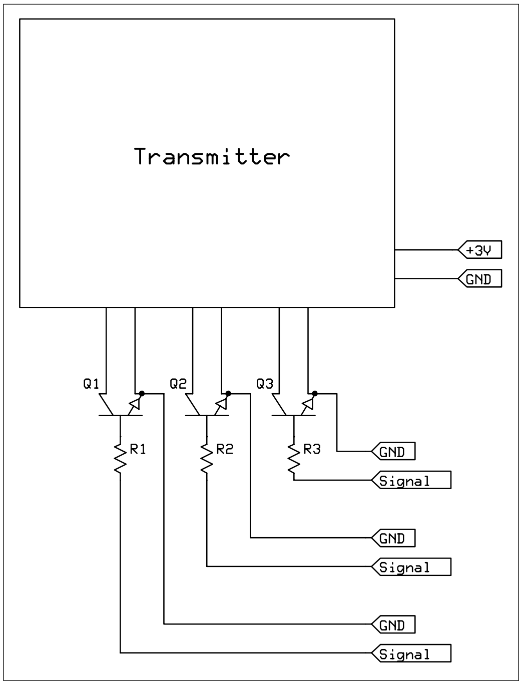

Figure 3. Mini R/C receiver diagram.

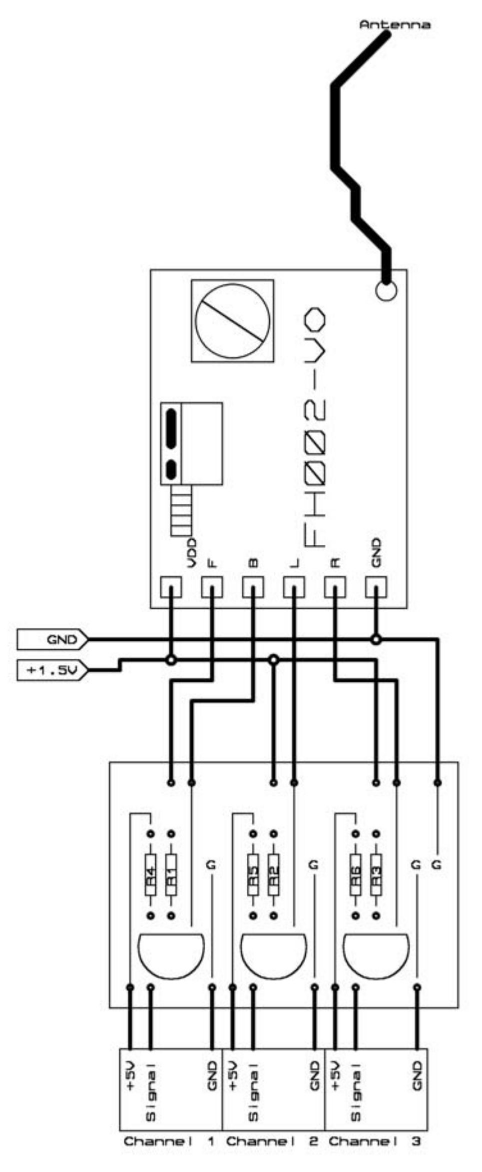

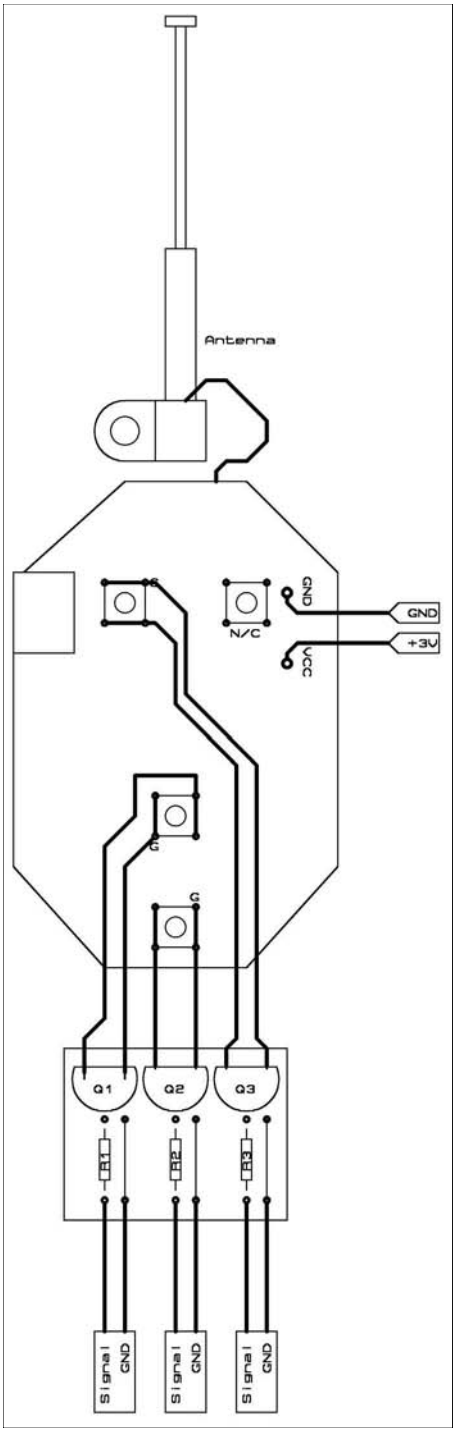

Figure 5. Mini R/C transmitter diagram.

making two perfboard interfaces, I designed a small printed circuit board (again, download it from the FTP library at **www.nutsvolts.com**).

Only three of the four switches are controlled by the microcontroller because of the reversed polarity in the receiver. One warning before you start — *do not screw in the antenna before beginning modifications.* The weight will break the antenna wire from the transmitter PCB while you're doing this modification. However, if you still manage to break the antenna wire (like I did — several times), set it aside and fix it later. After completing the transmitter hack, strip the insulation from the antenna wire back by about 1/4". Fold the wire over and tin the end. Apply a fresh coat of solder to the antenna solder pad and solder the wire back onto the solder pad. This pad is labeled ANT on the top of the PCB.

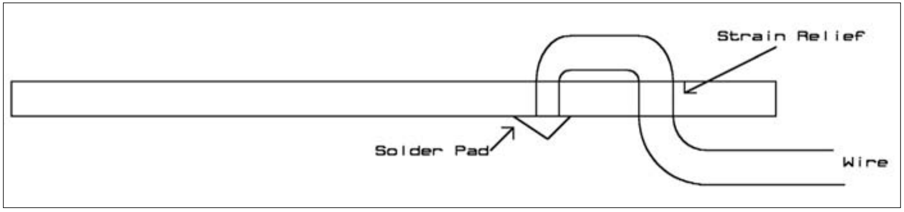

Figure 6. Strain relief for the solder connection.

Begin the modification by orienting the transmitter PCB so that the antenna's solder pad is located at the top. See Figure 5 for the proper orientation. Remove the red and black power wires from the transmitter and replace them with about 12" of #24 AWG stranded wire. I used red and green wires for this. Strip a short length of insulation from one end of the wires and tin them.

After tinning the ends, snip the wires back to about 1/8". Hold the tip of the red wire against the Vcc pad and, with a tinned soldering iron, heat the pad and wire until the solder melts together. After the solder cools, give the wire a little tug to insure that it's a good connection. Repeat this for the green wire. Cut two lengths of heat shrink tubing (about 1" long) and slide them over the free end of each wire. Bare about 1/2" of insulation from the remaining ends of the wires.

The two AAA battery holder come with stripped ends, but I recommend removing additional insulation. You can either twist the wires together and solder them or do like I do and tin each wire separately and then press them together as you heat them with a well-tinned soldering iron. Either way, after the solder cools, tug the soldered connection slightly; you want to make sure there is a good mechanical connection. After the solder cools, apply heat shrink tubing over the soldered connection.

Now, we'll solder wires to the push button switches (the switch wires). The push button switch at the top-right of the transmitter PCB is not used in this modification and is labeled N/C in Figure 5. I used a DMM set to continuity check and identify which pads of each button were shorted when the button was pressed before I soldered wires to the push buttons. If you use a different transmitter, then you'll need to do the same thing. The heavy lines in my diagram show where the switch wires are soldered to the solder pads of the push buttons.

There is no need to remove the push buttons for this hack. By leaving the push buttons in place, you can test the transmitter manually. Besides, removing the push buttons risks damaging the PCB of the transmitter. Cut six lengths of #24 AWG wire to a length of about 12". Strip and tin one end of each wire. Apply a fresh bead of solder to the four solder pads and pins of each push button, except for the N/C button.

Lay the wires alongside two pads of each button, as shown in Figure 5. Press a well-tinned soldering iron against the wire and one of the solder pads to solder them together. Hold the wire in contact with the solder pad until the solder cools. Now, solder the wire to the second solder pad. Each wire will have two connections to the PCB, making the connection that much stronger. Finish by repeating

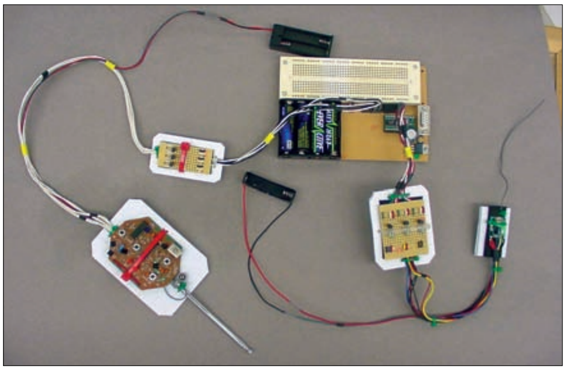

Figure 7. Completed transmitter and receiver connected to a BoRG Board.

the entire process for the remaining two switches.

For the transmitter interface board, I used the 276-168 perfboard. I cut a 1" section of perfboard, so the transmitter interface board measures 2" x 1". As with the receiver interface, lay out the components before cutting the perfboard. Be sure to include extra holes for the strain relief. Once you're happy with the layout, mark the dimensions on the perfboard and cut it. Sand the raw edges smooth before you begin soldering components.

Wires from the push buttons on the transmitter pass through their strain relief holes and are then soldered to the emitter and collector of the three 2N3904 transistors. Look at the wiring diagram carefully. Notice which wires from the push buttons are soldered to the emitter of the transistors and which are soldered to the collectors. If you reverse these wires, the transmitter will continuously transmit. The push button pin labeled with a "G" is connected to the emitter of the transistor. This is the only connection between the transmitter and interface board. Now, you're ready to add the connections to the robot controller.

Cut three black wires and three wires of a different color. The black wires are connected to the emitters of each transistor and are for the connection to ground. The remaining three wires are soldered to the base resistor of each transistor. Be sure to use a strain relief for each wire, as illustrated in Figure 6. Finish the wires by terminating them appropriately for your robot controller.

To complete the transmitter hack, you need to mount the transmitter and interface perfboard to a base. I used the same material and method for the transmitter as I did for the receiver; however, there is one addition. You need to mount the antenna jack before its wire breaks (again!). I used a #2-56 bolt, nut, and washer to attach the antenna jack to the sheet of correplast. Before doing so, I trimmed the little extraneous plastic tab from the mount with a sharp Xacto knife. Now, you can screw the antenna into its jack and then zip tie the antenna to the base. The finished project is shown in Figure 7.

Connecting the Radio to a BASIC Stamp 2

Put batteries into the transmitter and receiver. For the first test, push the transmitter buttons and verify that its indicator LED lights up. Next, test the transmitter and receiver with a single BASIC Stamp. Be sure to move the transmitter and receiver antennas away from each other during the test. This test involves HIGHing an I/O pin connected to the transmitter and then checking the status of all of the I/O pins connected to the receiver. This test is useful for determining which

Figure 8. An R/C racing car after being parked overnight in the wrong part of RoboTown.

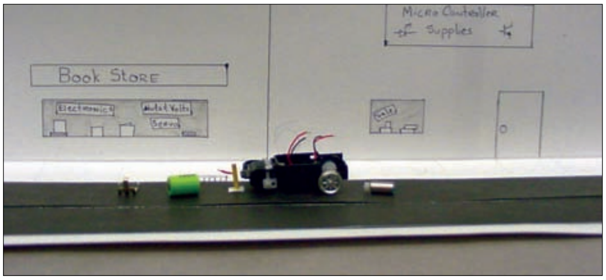

transmitter and receiver channels are connected to which I/O pins.

The code I used to test my transmitter and receiver is also available on the *Nuts & Volts* FTP library. I discovered something interesting running this test. The receiver could not receive signals from the transmitter unless the transmitter antenna was in my hand or fully collapsed. It appears the antenna is not effective when fully extended. Please let me know if you observe the same thing.

The ultimate and final test is to send serial data over your new RF link. I used the transmitter code to transmit the letter L between two BASIC Stamps. The baud rate of my code is about six because each bit in the serial data stream is 150 milliseconds long. This is not bad for an $8.00 transmitter and receiver.

In my code, the receiving Stamp runs a loop that waits for the start bit. After it is received, it waits 175 milliseconds and samples its receiver I/O pin every 150 milliseconds. The state of the pin is stored in successive bits of a one byte variable set aside for the incoming ASCII character. The initial long pause (175 milliseconds) after the start bit ensures that the sampling of successive bits occurs after the receiver has had a chance to settle down. If the I/O pin is sampled too close to the start of a bit, the receiver may not have time to settle down, leading to the bad transmission of data.

After receiving each bit, a one is added to the bit value. This flips (or toggles) the state of the bit. Toggling the bit is necessary because the receiver flips the sense of the bit that the transmitter is sending. The BASIC Stamp doesn't suffer from variable overflows. So, when a variable stores a number larger than that variable is defined, the neighboring variable is not destroyed. The BASIC Stamp has a command to toggle bits, but I think this method is a more entertaining way to do it. It kind of catches you off guard.

In a later test, I was able to knock the bit length for every bit down to 100 milliseconds, except for the first bit transmitted. It seems that a shorter first bit prevents the transmitter from transmitting that bit properly. If it's important to transmit at 10 baud, I recommend making the start bit 150 milliseconds long and the remaining eight bits 100 milliseconds long.

With three channels, you can send data between three robots using what I call channel multiplexing. The RF frequency used between all three robots is the same, but the frequency of the square wave sent over the RF link varies. It's the frequency of the square wave that determines which channel the data is transmitted and received on.

I hope you find this hack useful; I plan to build a three robot project this summer to use the radios. **NV**

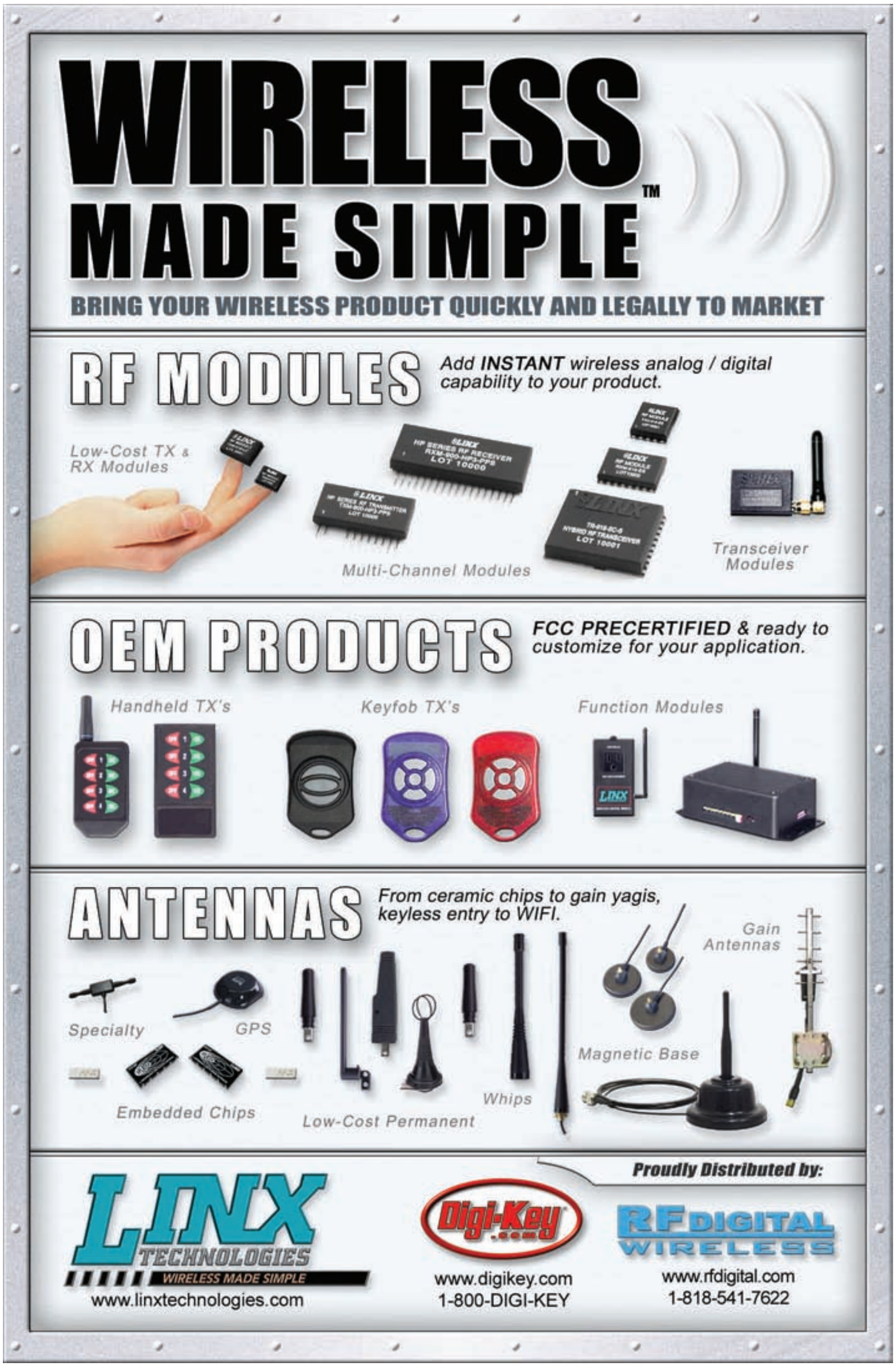

Windsor

See more surplus electronic goodies at:
www.shopatwindsor.com

Hitachi LCD display

16 character by 2 lines 5x8 dot matrix character 64.5 x 13.8 mm viewing area STN neutral mode reflective LCD recently discontinued by Hitachi but a very common and most used part. Directly crosses over to the Optrex DMC16249, brand new stock!
0123260R $4.95

Fiber Optic Transceiver

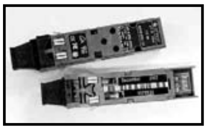

New, by Infineon. Has laser transmitter and receiver in one package! 1.25 Gb/s data rate up to 700 M on low cost multimode fiber! Super small size, complete specs on the web. Make your own fiber optic link!
0125461R (Set of two) $19.95

Switching Supply

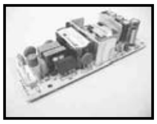

Phihong PSM4954A
Universal 100-240VAC input
14 VDC output @ 1.8 amps
Small size, 2x1x5”
0123815R $4.95

12 V Gel-Cell and Charger Set

New 12 Volt 2.8 Amp-hr sealed Gel Cell lead acid battery and charger with cigarette lighter jack. Charger is 12V 400ma, battery is 0.8x2.4x7” Gel cells are rugged and no memory effect!
0124867R $9.95

9 VDC SPST Relay

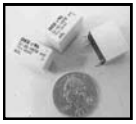

OEG Relay, Model # OJ-SS-109TM, 9 VDC SPST, NO contacts, 180 ohm coil, 3 amp contacts, Small size .4" x .7" x .6" PC mount
0124685R (pack of 5)...........................$1.95

Powerful DC Motor

Made by Johnson Electric
12 VDC @0.85 A no load, 17,000 rpm, 3 vdc @ .51 amps 4,200 rpm, 6 vdc @ .6 amps 8,500 rpm. Similar to Johnson Electric HC313MG series but higher power. Actually runs as low as 1 volt operation! (1200 rpm .46 amps). Size: 2" l x 1.5" dia 7/8" long eccentric brass shaft end - easily broken off to form a .5" long x .312 dia round shaft end.
0123850R $4.95

Windsor

WINDSOR DISTRIBUTORS COMPANY
19 Freeman Street
Newark, New Jersey 07105-3708
Ph: 973-344-5700 Fax: 973-344-3282

VISA MasterCard AMERICAN EXPRESS DISCOVER

ORDERING INFO: Add $6.95 for shipping, handling and insurance. Orders under $25, add $5.00 small order fee. NJ residents add 7% sales tax. Sorry, no CODs. Foreign orders: use credit card and specify shipping method desired.

Amplified Speakers

Super nice Motorola amplified speaker, runs on 12 VDC, 6 watts. 5x5x2” metal case with adjustable mounting bracket.
0124871R $11.95

Motorola Hands-free amplified speaker and switching power supply. Contains a Philips TDA1519 stereo 6 watt per channel IC amplifier, 5 VDC @ 1 amp switchmode regulator (adjustable from 4.8 - 7.5 VDC), sensitive electret microphone with preamp, cigarette lighter cord, plus a universal mount with handy spring clip to attach anywhere! Super rugged ABS plastic enclosure and fine sounding speaker! Works great as amplified speaker for CD and MP3 players, and the internal power supply has plenty of power to run any player! (5 volts replaces 4 AA cells) Brand new with hook up instructions on how to connect to any CD or MP3 player.
0123853R $9.95

Ericsson Desk style speakerphone unit contains nice amplified speaker as well as Motorola MC31118 speakerphone IC. Includes details on converting to a sweet sounding amplified speaker for iPod! Runs on 6 VDC and we even include the AC adapter!
0124605R $12.95

Rugged Speaker

Quality speaker includes swivel mount and is 4.5x2.5x2.5” Includes 6 ft cord 3.5mm plug.
0127567R $4.95

Super Micro Tiny Speakers

Real tiny full range speakers as used in cell phones. Very small, approx. 0.75”dia 0.15” thick, quality gold contacts. You get 2 pcs of each, Style A is 110 ohm, Style B is 32 ohm. Style B includes double stick foam mounting.

0123338R Set of 4 spkrs $1.25

Electret Microphone

Well made sensitive high fidelity electret microphone. Used in cellular hands-free options. Includes mounting clip, lavaliere clip and velcro tape, nice adjustable base, long 10 foot cord, noise cancelling design. works well with any tape or minidisc recorder. We were amazed at the sound!
0124701R $1.29

Our web site has lots more great deals - in both small and large quantities too. Check it out!

Mobile Mike

Top quality Motorola mobile microphon. Standard modular style mic plug. Includes heavy duty mic mounting clip.
0127531R $9.95

Cellular Bi-Directional Amp

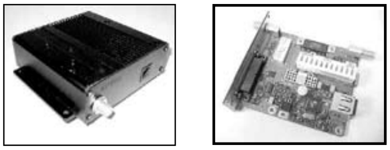

Made by Motorola, features powerful 3 watt RF amplifier for transmit and sensitive receive amplifier. Utilizes diplexer ceramic filters. Additional circuitry for protection, regulation, etc. Sorry, we have no specs on this, but its a treasure trove for the experimenter and RF guru. Brand new. Size: 4.5 x 5 x 1.5” in rugged extruded aluminum heat sink style case. Uses mini-UHF connectors.
0127460R $14.95

Kester 60/40 Solder

First rate, Kester Solder, 1 lb roll, standard 60/40 alloy rosin core (flux 282), .03" dia
0124711R $7.95

Rechargeable Battery Blowout!

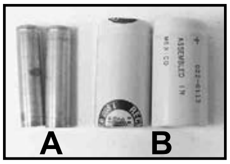

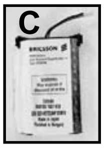

Popular Nicad batteries, 1.25V all brand new, recent stock. A &B are NiCad and C is NimH.

A: AAA	400mah	0125339R	2 for $1.00
B: Sub C	2500 mah	0125443R	2 for $1.75
C: 3.6 Volts	750mah	0125348R	2 for $3.00

Nice, new 5 AA cell nicad pack. 6 Volt 700mah with 6” wire leads. Great for projects or corless phone replacements.
0125345R.....................$2.50

Lithium Ion Rechargeables !!

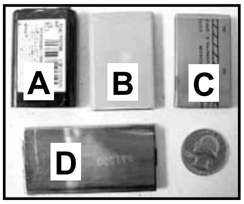

Rechargeable Lithium batteries pack the highest density of power for size and weight! Ideal rectangular size is easy to fit in your project. All 3.6 Volt and approx rated Amp-Hour capacity.

A: 1Ah	1.95x1.34x.4”	0125337R.....$1.50
B: .8Ah	1.95x.1.34x.25”	0125349R.....$1.25
C: .8Ah	1.95x1.24x.23”	0125350R.....$1.25
D: 1.8Ah	2.6x1.34x.25”	0125335R.....$2.00

www.shopatwindsor.com

Circle #52 on the Reader Service Card.

Electronics Q&A

In this column, I answer questions about all aspects of electronics, including computer hardware, software, circuits, electronic theory, troubleshooting, and anything else of interest to the hobbyist.

Feel free to participate with your questions, as well as comments and suggestions.

You can reach me at: **TJBYERS@aol.com**.

What's Up:

All about relays: low-power operation, low voltage operation, and AC coils operation. Two projects on the lighter side and sidacs defined. Photo websites and lots of feedback from our readers.

About Relays

Q. I would like to build the "Precision On/Off Timer" described in the May 2004 column, but you didn't specify what relay to use. What were you thinking?

John O'Hara
via Internet

A. I had in mind the RadioShack 275-005 or something equivalent. Actually, the relay isn't as critical as you may think. Electromechanical relays (which include reed relays) are current operated — not voltage operated. Inside the relay is an electromagnet — turns of wire wound around a soft iron core — that's in close proximity to a hinged metal armature (Figure 1). Running current through the coil pulls the armature toward the electromagnet and makes contact with the NO (normally open) electrical contact.

Figure 1

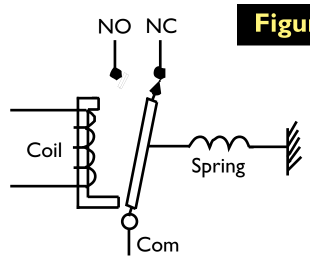

Figure 2

Reducing Relay Coil Power Consumption

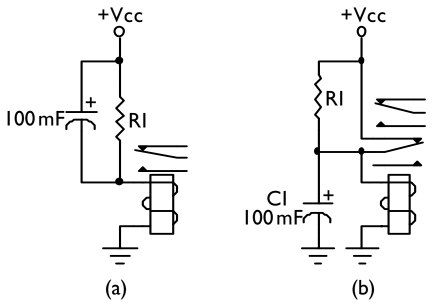

The force required to pull-in the armature is determined by the ampere-turns around the iron core. If a relay needs 10 ampere-turns to operate, you can put 10 amps through one turn or one amp through 10 turns; 100 mA through 100 turns or 10 mA through 1,000 turns.

Since copper wire has resistance, the more turns you have, the longer the wire and the more the resistance. It's the resistance of the coil that determines the operating voltage of the relay.

For example, a relay with a 500 Ω coil and a pull-in current of 10 mA requires at least 5 volts to operate, but it will also work at 10 volts (20 mA) or 15 volts (30 mA). The upper voltage limit is determined by the heat build-up in the coil. Ifu the current (heat build-up) is more than the relay can handle, simply insert a resistor in series with the coil.

In reality, most relays will pull-in at 90% of the rated current (9 mA at 4.5 volts in our example). Once the armature pulls in, though, less current is needed to hold it in place. In fact, some armatures won't disengage until the current is less than 10% of the pull-in value. We can use this to our advantage to reduce the holding current once the relay is engaged. If the current is reduced by two thirds, you save about 67% on power. This is definitely an advantage when using relays with battery operated equipment. Figure 2 shows two methods.

In method (A), full current will flow through the relay while C1 charges. When fully charged, the cap appears as an open circuit and the current is now limited by R1. The disadvantage of this is that — if the

Figure 3

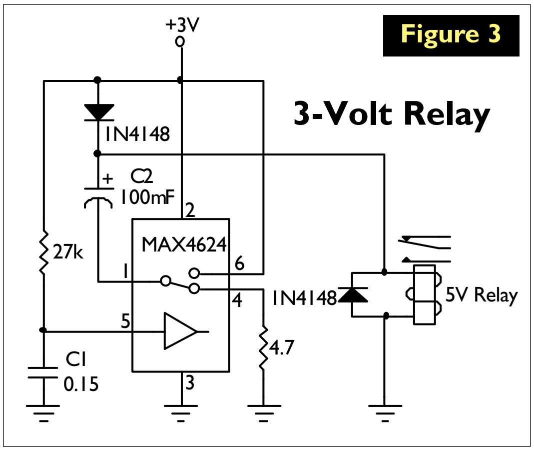

Figure 4

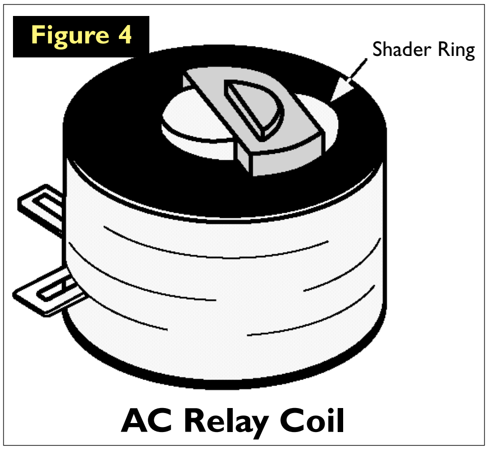

Figure 5

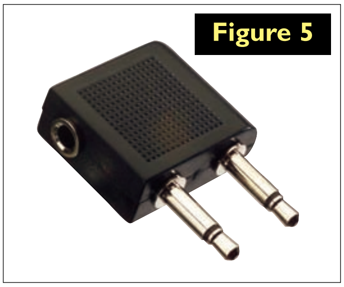

armature is dislodged by vibration or shock — there won't be enough current to pull it back in. Method (B) solves that problem, but requires an extra set of contacts. Capacitor C1 maintains a voltage across the coil during the switching transition to prevent chatter.

More Relay Stuff

Q. I need to operate a relay-controlled circuit from a 3 volt battuery, but 3 volt relays are about as scarce as hen's teeth. So, I'm wondering, is there a way to use a 5 volt reed relay from a 3 volt source?

Tom Edwards
via Internet

A. If you've been following the above ("About Relays"), you'll know that what's needed is a short burst of energy to engage the coil: that is, a temporary boost in voltage from 3 volts to 5 volts. After that, the relay will hold its own. What I'd use is a capacitor that's been charged to Vcc and add it in series with the relay coil to generate a burst of 2 x Vcc volts to engage the relay.

Basically, what I'm going to do is put a charged cap in series with the 3 volt source to generate about 6 volts that will pull-in the relay.

After that, the relay will remain closed, so long as the 3 volt source remains. There are a lot of ways to do this, but the simplest I've found is one using Maxim's MAX4624 analog switch, as shown in Figure 3. For it to work, the charging time of C1 must be longer than the charging time of C2; i.e., C2 must be fully charged before the analog switch turns on.

AC Relays Are a Shady Deal

Q. Could you please explain the difference between a DC relay coil and an AC relay coil? This has been bugging me for many years and I haven't been able to find an explanation.

Lee Marker
via Internet

A. AC relays are generally constructed like DC electromechanical relays with a portion of the core pole face separated from the rest of the pole face and enclosed in a loop of copper (Figure 4). This loop — called a shaded pole — produces a lag in the timing of the AC magnetic flux between the faces of the pole. While the current in the coil passes through zero twice each cycle, the flux in the armature gap remains at a high enough level to hold the armature in place.

The current drawn by a shaded pole relay is determined by the AC impedance of the coil at the power line frequency, which depends on the coil construction and

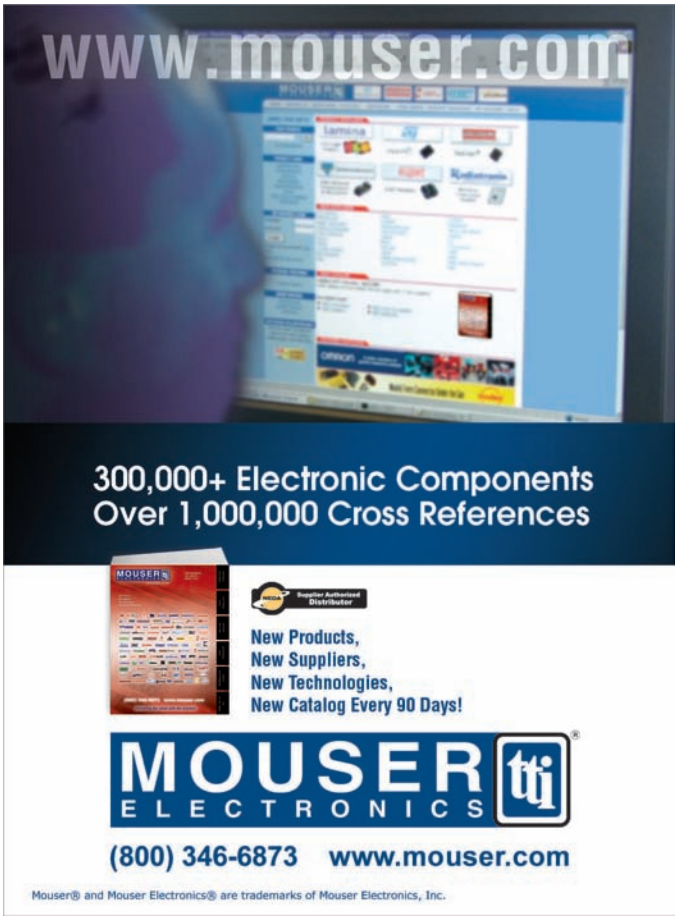

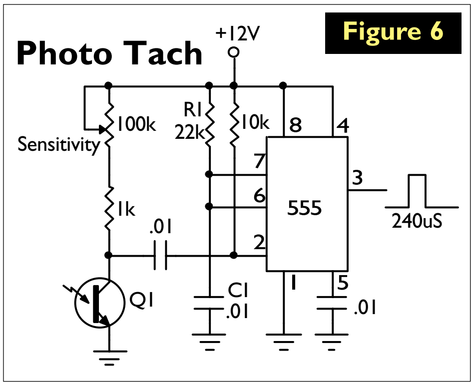

Figure 6

Photo Tach

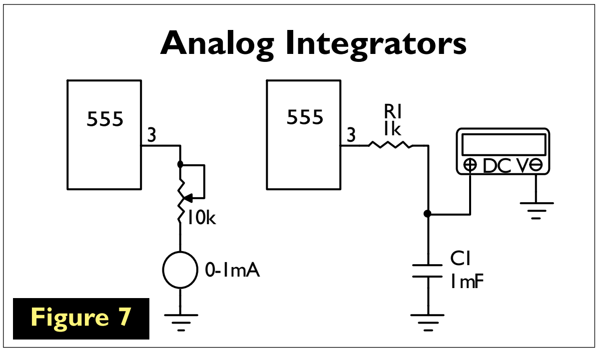

Figure 7

Analog Integrators

the armature position.

For example, the impedance of a relay may be twice as large with the armature engaged as with it deenergized. Consequently, the window between the pull-in and drop-out currents is much narrower than with a DC relay. Some relays can't remain energized or may chatter badly if the coil current drops to half of the rated pick-up value.

I'm Leaving on a Jet Plane

Q. I want to replace my lost "LOTUS" Wallace Jetset-Airdaptor. This product is designed to convert an airline's air-pipe sound system into an electrical signal.

In practice, one inserts the yellow connector and the short tubing from the Airdaptor into the outlet on the seat arm. You then insert the plug of your personal stereo headphones into the Airdaptor's output socket. You can now hear the airline's entertainment.

I originally purchased mine from Markline Warehouse in Bristol, PA. No, they do not have them anymore. Do you know where I can find another one?

Ed Knorr
via Internet

A. The last time I flew (last summer to Hawaii), the connection was a dual, 3.5 mm phone plug with electronic earphones — not the air-powered headsets of yesteryear. If you don't like the airline's earphones, you can buy an Earhugger EHA-18 earphone adapter (Figure 5) that lets you plug your own stereo headphones into the airline jack. They are available from several retailers and sell for as little as $3.00.

Let There Be Light

Q. In the March 2004 issue, you showed an instrument which seems to be able to reform the majority of my "cap box" devices. The required components are readily available, but (of course, there's always a but), I cannot find the reforming light identified as 1490 in any of my catalogs. Do you know where I can get a few or would you share the intended operating voltage and current for this device with me so I can get one that is close?

Bob Bates
via Internet

A. Back when I was a kid — just shortly after the world ceased to be flat — we used pilot lamps instead of LEDs to indicate when an electronic device was powered on — or in the case of the 1490 lamp, to illuminate the dial of my 1965 Dodge car radio.

Unlike LEDs, pilot lamps

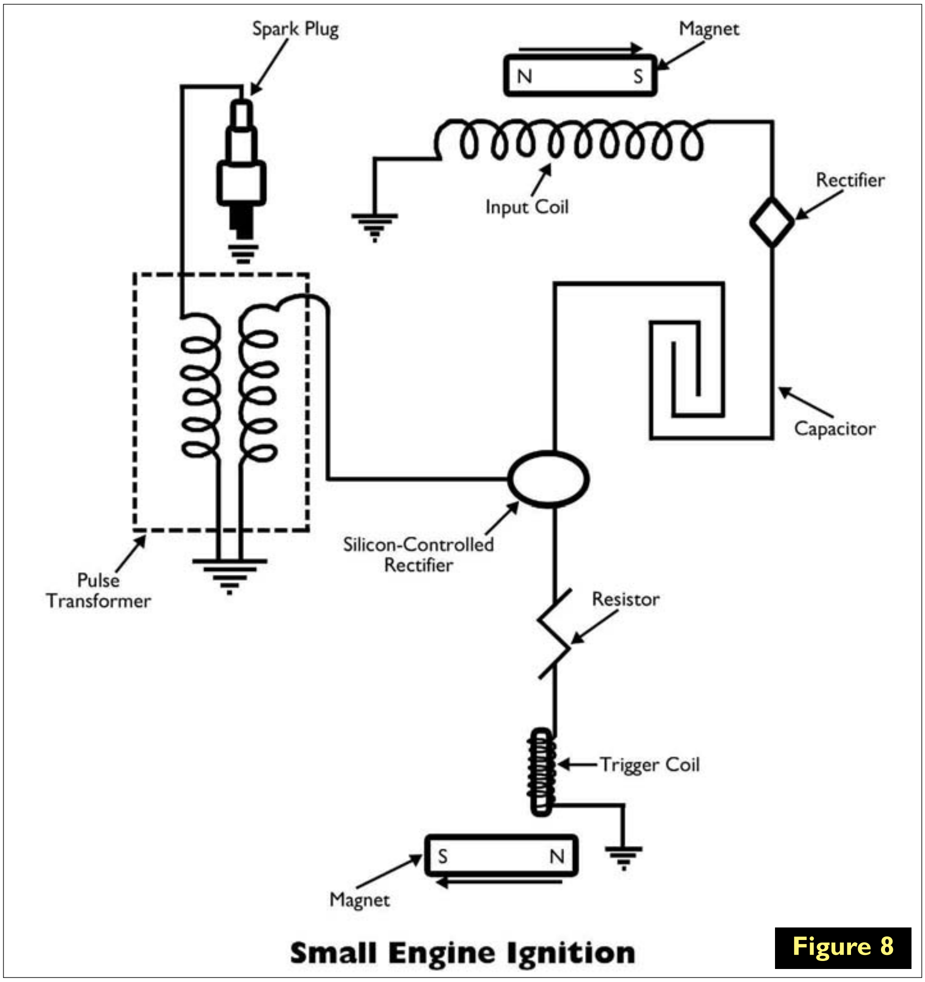

Small Engine Ignition

Figure 8

produce light by heating a tungsten wire (filament) white hot by running current through it. In this circuit, I'm using that wire to indicate when current is flowing to reform the capacitor. If and when the capacitor is fully reformed, no current will flow through the lamp and it will cease to glow.

So, as you can see, it's merely an indicator and not critical to reforming the cap itself. The 1490 is rated 3.2 volts at 0.16 amps. Most auto part stores should carry this bulb. If not, try to find a PR-9 bulb — often used in flashlights. If all else fails, just don't use a bulb at all (short it out) and guess when the cap no longer draws current.

Photo Tachometer

Q. About your "Another Zero-Crossing Detector" in the October 2003 column: Can the circuit described in Figure 3 be adapted to a 12 volt tachometer circuit? That is, can the input be changed so it looks at a rotating, segmented black and white wheel on the end of a rotating shaft (instead of the bridge input) and the entire circuit be run on 12 volts instead of 5 volts?

Alan Turof
via Internet

A. Simply replace the 4N25 optoisolator with a phototransistor. To increase sensitivity and reduce noise, I put the phototransistor at ground level and moved up the "biasing" resistor to Vcc (Figure 6). Every time the transistor sees white, the 555 monostable multivibrator outputs a 240 µS pulse. To change the width of the output pulse, adjust the values of R1 and C1 using the formula: $t = 1.1(R1 \times C1)$.

To make it a tachometer, though, you need to count the pulses. This can be done using a digital frequency counter or an analog integrator. Figure 7 shows two types of analog integrators. The circuit on the left side of Figure 7 shows a simple circuit that uses a panel meter as the integrator. In this circuit, the inertia of the needle smoothes out the lows and highs, giving an average value of the output voltage.

The circuit on the right side of Figure 7 is an R/C integrator that lets you replace the panel meter with a DVM. The amount of integration is dependent upon the values of R1 and C1, which are also dependent upon the time constant of the circuit. As a rule of thumb, the time constant should be at least 10 times greater than the time duration of the input pulse for integration to occur.

Mower Ignition Fix

Q. I have an old mower tractor with a Tecumseh engine and a 12 volt battery system. The solidstate ignition is bad and they no longer sell a replacement part for it. Is there a way I could build a circuit that would charge a capacitor that the trigger coil would discharge to the pulse transformer each cycle?

Don
via Internet

A. What you have there is a capacitance discharge ignition (CDI) that's commonplace in today's automobiles. What you do is charge a capacitor with a high voltage (about 320 volts), then discharge it through the pulse transformer. The result is about 50,000 volts that jump across the gap of the spark plug and ignite the gas/air mixture in the cylinder.

The input coil of the original system is what created the high voltage, while it was the trigger coil that told a silicon-controlled rectifier (SCR) to discharge the capacitor at the right moment for proper ignition timing (Figure 8).

Only the pulse coil and trigger coil have to be salvaged from the old module to make a working replacement (Figure 9). The high voltage is now generated by T1, a 12 volt, center-tapped power transformer (RadioShack P/N 273-1511) in a reverse configuration. That is, the secondary is the low voltage, 12 volt input and the primary is the high voltage AC output that, when rectified, charges the CDI discharge cap.

Three 555 timers generate the 12 volts AC needed by toggling the power transistors on and off so that only one transistor is conducting at a time. The master 555 uses the

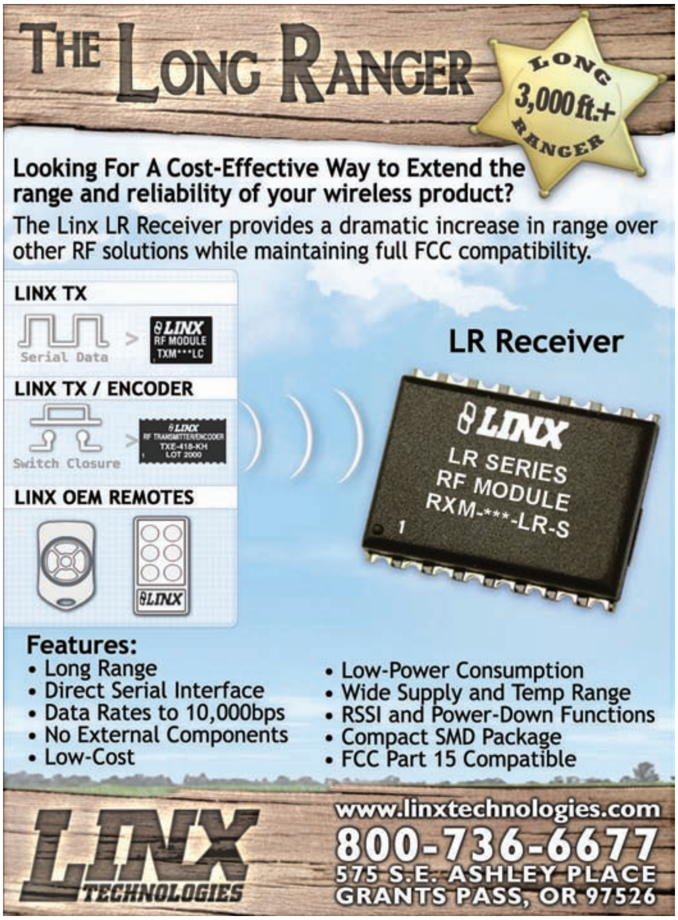

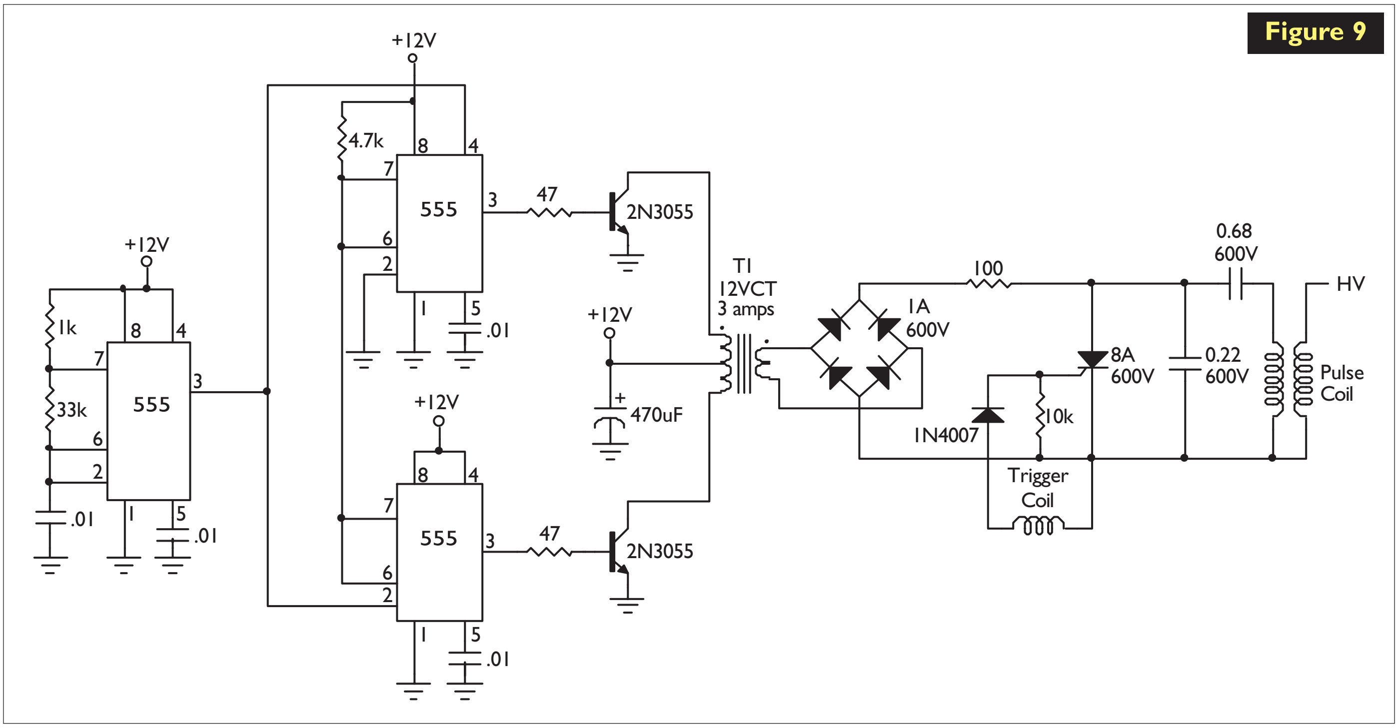

Figure 9

reset (pin 4) and trigger (pin 2) inputs of the timers to alternately turn on and off the slave 555s .

Let There Be (Street) Light

Q. Can you suggest a circuit that uses a photocell to turn on a 4 kW incandescent light at night? It should have an adjustable "on" time from three to six hours, then turn off and reset for the next day.

Thomas V. Wahl
Pekin, IL

A. I considered three designs before deciding on this circuit (Figure 10). The timer is built around two digital dividers. The first — a 4060, 14-stage ripple counter — provides the main clock. This chip has a built-in oscillator. The oscillator — with a frequency set by the 100K/0.68µF resistor/capacitor combination — outputs a pulse to the 4017 every 36 minutes.

When light falls on the phototransistor, it conducts and places a logic 1 (high) on the MR pins, which, in turn, resets all the counters to a logic 0 state. When the sun goes down, the counters start and light the lamp for the time selected by the DIP switch. Just make sure there is only one switch turned on or the shortest-timed switch will dominate.

The rising sun resets the counters and readies them for the next dusk cycle. Oh, don't forget to heatsink the triac and don't let the AC get close to the DC, which is nothing more than a 9 volt battery or wall-wart.

Dump Those Temps

Q. I am running windows 98SE. In the DOS mode, I went to C:\windows\temp and found that I have 375 files in my "TEMP" folder, which

Figure 10

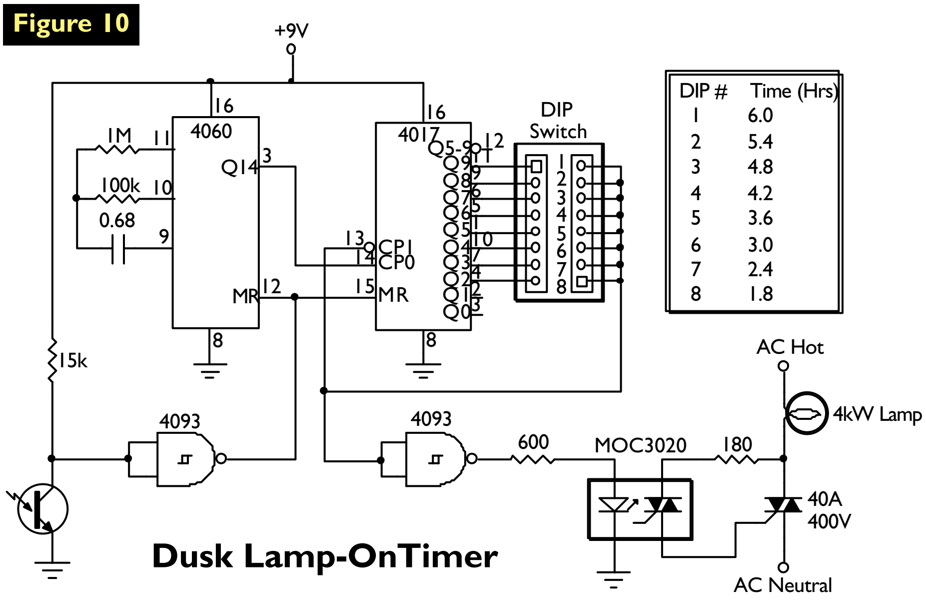

DIP #	Time (Hrs)
1	6.0
2	5.4
3	4.8
4	4.2
5	3.6
6	3.0
7	2.4
8	1.8

Dusk Lamp-OnTimer

are using 37 MB of hard disk space. There are 230 files serially numbered from HPH1 through HPH230 (no extension), plus quite a number of files with extensions .tmp, .log, and .txt. I've been told that those files can be deleted without affecting my computer operation.

Is it true that I can delete all of the files in the TEMP folder without a problem? Are there any that I should leave?

Curt
via Internet

A. Indeed, anything in your Windows\temp folder can be deleted. Check out the Disk Cleanup feature in Windows 98; it targets this folder (but doesn't empty it completely), as well as a couple of other areas that tend to accumulate files. Find Disk Cleanup in your My Computer icon under the C: drive. Right click on the open space to the left and choose Properties.

MAILBAG

Dear TJ,

I don't mean to split hairs, but your answer to the person with the sound card problem (April 2004) doesn't correctly identify the problem. The A/V system(s) aren't really "expecting" any particular input impedance and don't really care what the output impedance of the sound card is — it can be anything from zero to several 10s of KΩ, depending on cable length and signal level concerns.

What is needed, your answer *does* provide — ground circuit isolation and a boost in signal level. Your solution is great, but I found the explanation emphasizing the wrong issue.

Dick Moore
via Internet

Dear TJ,

Robert G. Blazej (April 2004) should also be advised that, for much less than $100.00 he can substitute a woofer and the accompanying two tweeters for the existing speakers on his computer. Atec is one of the manufacturers.

I bought their set for $30.00 and I love to see people's reactions when they hear it play. I have to show them the woofer under my desk and the two small speakers behind the monitor.

Bill Lawson
via Internet

Response*: I bought my Altec PC subwoofer system from* ***www.store.yahoo.com/csfostore*** *for $9.95 and I love it — albeit that the wiring can get very tangled.*

However, I also have a PC connection to my A/V system, too, which is an ongoing interface experiment between my PC and an ultimate A/V experience.

— TJ

Dear TJ,

I always enjoy reading your column and think your vibrator replacement is great!

However, if Carl doesn't want to build one, he can buy them from Antique Electronic Supply, Tempe AZ (**www.tubesandmore.com**). They have several types, 3 or 4 pin, 6 or 12 volts, pos or neg ground — ranging from $16.95 to $29.95 — much less than the $40.00 he mentioned.

Jim
via Internet

Dear TJ,

I was looking at the March 2004 issue and I found an error in the circuit of Figure 8. The first two resistors are marked 100K — which set up the voltage divider — should be 10K. At 100K, the circuit doesn't oscillate.

Steve Jacob
Principal Engineer
Raytheon Missile Systems

Response: *I tested this circuit using an LM2904 opamp and it worked quite well. The reader is happy with it, too.*

In fact, this design even works with a 1M voltage divider (I used these values in an upcoming column for a low-battery indicator). The values are not critical to the circuit as long as they are equal so that the tap forms a pseudo ground.

All I can think of is that your opamp has a low input impedance (perhaps an LM3900), in which case it would require a 10K divider. Bottom line: Go with what works.

—TJ

Steve's Response: *Yep, I was using a very old 741 equivalent I had kicking around in my junk box (and probably a surplus one at that). This just shows you how fast opamp parameters are improving in this fast-paced semiconductor age.* **NV**

Cool Websites!

Into digital photography? Check out these free image handling utilities.
www.prismaticsoftware.com/Utility/Utility.html

Fine tune, store, and edit your digital photos. Free courses from HP.
www.hponlinecourses.com/?mcID=smbem

The Digital Darkroom Software Center: A comprehensive listing of popular digital photography software that you can try before you buy.
www.shortcourses.com/software/index.html

ALL ELECTRONICS CORPORATION

QUALITY Parts
FAST Shipping
DISCOUNT Pricing

CALL, WRITE, FAX or E-MAIL for a FREE 96 page catalog.
Outside the U.S.A. send $3.00 postage.

16 CHARACTER X 2 LINE LCD WITH LED BACKLIGHT

EDT # EW162C
16 character X 2 line LCD module with LED backlight. 5 x 7 dot characters.
Module size: 3.35” X 1.41” X 0.52”.
Display size: 2.5” X 0.63”.
Includes hook-up diagram.
CAT# LCD-97

$10.25 each

CIGARETTE LIGHTER COIL CORD

Good-quality coil cord with cigarette lighter plug one end, 2.1mm coax plug other end.
Plug has LED indicator and removable 2 Amp AGC fues. Extends to 6 feet. **CAT# CLP-68**

$3.25 each

Case of 60 for $2.75 ea.
120 for $2.50 each

4.5” 24 OHM SPEAKER

4.5" paper cone speaker with 5.6" metal mounting frame. 2.6" deep. Mounting holes are on 3.75" centers.
CAT# SK-4524

$1.85 each

10 for $16.00
100 for $125.00

1.5-6 VDC JOHNSON MOTOR

Johnson Motor. 0.78" x 1" x 1.38" long. 0.08" (2mm) diameter x 0.33" long shaft. 10,000 RPM @ 3 Vdc @ 40 mA (no-load rating). Solder-lug terminals.
CAT# DCM-189

2 for $1.00

120 for 42¢ each
480 for 38¢ each
960 for 34¢ each

3.6V AA LITHIUM BATTERY

SAFT # LS14500. 3.6 Volt, AA Size lithium with axial leads. 0.55" diameter x 2" long with wire leads extending another 1.6".
CAT# LBAT-40

$1.75 each

10 for $15.00

ULTRASONIC TRANSDUCER

Matsushita #0D24K2.
0.95" diameter x 0.38" metal case.
0.65" long pc leads on 0.4" centers.
CAT # XDR-24

$1.25 each

10 for $1.00 each

LIQUID LEVEL ALARM IC

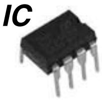

ST Microelectronics # L4620.
An integrated circuit designed for the liquid level control in automotive applications. The liquid level is determined by the attenuation between transmitted and received signals across a sensor tip in the liquid. If the attenuation exceeds an internal threshold - sensor tip outside the liquid or liquid temperature higher than a determined value – a square-wave alarm output indicates an insufficient liquid condition. Internal circuits prevent spurious indications, and a latch keeps the alarm activated until the supply voltage is switched off. 8-pin dip package. Spec. sheet available on our web site.
CAT# L4620

$1.20 each

50 for $1.00 each

8 MM VIDEO TAPE (USED)

(120 minute) video cassettes. Top-of-the-line, Sony or Fuji (depending on availability), metal particle cassettes, used for a short time, then bulk erased.
Includes plastic storage box. **CAT# VCU-8**

$3.00 each

10 for $2.80 each
100 for $2.50 each

12 VDC 0.9 AMP SWITCHING POWER SUPPLY

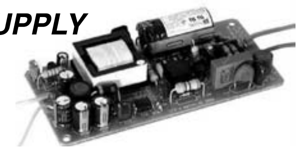

Phihong
PSA-10L-120
Input:
100-240 Vac
Output: 12 Vdc 0.9 Amps
Low profile, open-frame switching supply. 4.15” x 1.95” x 0.78” high. Regulated. Overvoltage protection. Overcurrent protection. UL, CE. **CAT # PS-129**

$3.75 each

10 for $3.50 each
90 for $2.50 each

16 BUTTON INDOOR/ OUTDOOR KEYPAD

Fully-sealed, tactile snap-dome contacts. Contacts rated 30 mA @ 12 Vdc. Ten black keys numbered 1 to 0 (and A to J).
Five blue keys with up-down arrows (also right-left), CLEAR, HELP and ENTER.
One red key labeled 2ND. TTL, MOS and DTL compatible. 4 x 4 buttons (2.7” x 3” x 0.36”). 9-pin headers, 0.1” spacing.
CAT # KP-23

$12.50 each

10 for $11.50 each

2 AA CELL NIMH PACK

2.4 Volt, 1500 MAh nickel metal hydride battery pack. Two AA cells with a 2-conductor female connector on 2" leads. Used in many cordless phones.
CAT# NMH-2AA

$2.00 each

SPECIAL QUANTITY PRICING GREEN T-1 3/4 LED

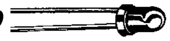

Liteon# LTL-307G. Our lowest price ever on standard green 5mm diameter (T-1 3/4) LEDs. Green diffused, standard brightness LEDs. Clean, full-leaded devices.
CAT # LED-2

10 for $1.50

100 for 12¢ each
1,000 for 5¢ each ($50.00)

Shop ON-LINE www.allelectronics.com
ORDER TOLL FREE 1-800-826-5432

MAIL ORDERS TO:
ALL ELECTRONICS CORP.
P.O. BOX 567 • VAN NUYS, CA 91408-0567

FAX (818) 781-2653 • INFO (818) 904-0524
E-MAIL allcorp@allcorp.com

NO MINIMUM ORDER • All Orders Can Be Charged to Visa, Mastercard, American Express or Discover • Checks and Money Orders Accepted by Mail • Orders Delivered in the State of California must include California State Sales Tax • NO C.O.D • Shipping and Handling $6.00 for the 48 Continental United States - ALL OTHERS including Alaska, Hawaii, P.R. and Canada Must Pay Full Shipping • Quantities Limited • Prices Subject to change without notice.

MANUFACTURERS - We Purchase EXCESS INVENTORIES... Call, Write, E-MAIL or Fax YOUR LIST.

Circle #50 on the Reader Service Card.

A COOL NEW BOOK

Written by best-selling investigative author Lee Lapin, *How to Get Anything on Anybody*, Book 3 includes 600 pages of the latest federal level electronic surveillance, people tracking, and asset searching. *PI Magazine* wrote, “Simply an unbelievable ‘must have’ information guide for investigators.” Cost is $99.95 with free shipping. CA residents, add sales tax.

For more information, contact:

INTELLIGENCEHERE.COM
Tel: **866-885-8855**
Web: **www.intelligencehere.com**

Circle #122 on the Reader Service Card.

HOME AUTOMATION SOFTWARE CONTROLS MID-HUDSON NYC BRIDGE LIGHTS

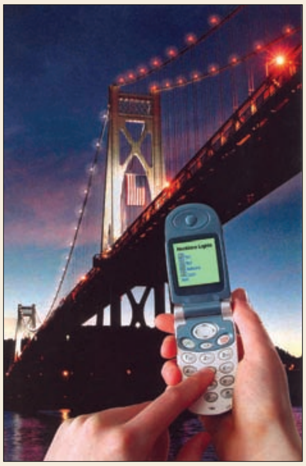

HomeSeer Technologies, LLC of Bedford, NH — specialists in home automation control systems — announced that their software was chosen to control lighting on the Mid-Hudson Bridge, NYC, by remote control. It was selected because of its wide variety of controllers, all of which work via the Internet, and because it could be readily customized for the application.

HomeSeer V1.7 Home Automation Software features an intuitive web control capability that lets users control lighting and appliances in their home from anywhere in the world via the Internet from a browser, telephone, PDA, or cellular phone.

Adapted for use on the Mid-Hudson Bridge to provide remote on/off control and scheduling for different sections and colors of lights, this Windows® based software eliminates the need to create a custom program.

Suitable for a variety of remote applications, HomeSeer V1.7 Home Automation Software is also ideal for controlling irrigation systems. It can trigger events based upon a wide range of mechanisms and can perform actions, such as running scripts, sending Emails, and dialing a phone.

HomeSeer V1.7 Home Automation Software sells for $149.95 and a free, 30 day trial can be downloaded from the HomeSeer website at no cost or obligation.

For more information, contact:

HOMESEER TECHNOLOGIES, LLC
109 Powder Hill Rd.
Bedford, NH 03110
603-471-2816 Fax: **603-471-9128**
Email: **kfranz@homeseer.com**
Web: **www.homeseer.com**

Circle #117 on the Reader Service Card.

ETHERNET STARTER KIT

Imagine Tools launched its Ethernet Starter Kit, which takes an application-based approach for adding value to the product. Several practical application notes can be downloaded from the Imagine Tools website for innovative Ethernet uses of this embedded control system kit.

Applications specific to this kit include an X-10 household automation, Ethernet proximity sensor, web-controlled thermostat, network lighting control, and more. The Ethernet starter kit is designed to bring the fun into both TCP/IP training and offer a low-cost solution for veteran users who are looking for an embedded controller that is simple to use.

Imagine Tools plans to grow its business based on user-contributed designs. As the number and scope of applications increases, greater value is added to the Ethernet Starter Kit for users to take advantage of. Imagine Tools is seeking to publish any practical or fun applications created by users. Users whose applications are published on the Imagine Tools website will receive rewards based on the “cool factor” of the application and the number of working applications from that particular user. Submission criteria are: a working application with a wiring schematic, list of materials, sample C program, and brief overview of the application.

The Ethernet Starter Kit is built around the Rabbit Semiconductor R3000 microprocessor. This eight-bit platform is designed specifically for embedded control systems and is also used in Rabbit Core Modules. The kit contains a starter board for prototyping and wiring various applications to the core module included in the kit. Dynamic C Lite is a free, simplified educational version of the industry-proven Dynamic C Integrated Development Environment for use in the kit. This free C language compiler provides a simple interface to program and run applications.

For more information, contact:

IMAGINE TOOLS
2900 Spafford St.
Davis, CA 95616
Email: **info@imaginetools.com**
Web: **www.imaginetools.com**

Circle #140 on the Reader Service Card.

TRUE ANALYSIS OF AN ASYNCHRONOUS SERIAL LINK

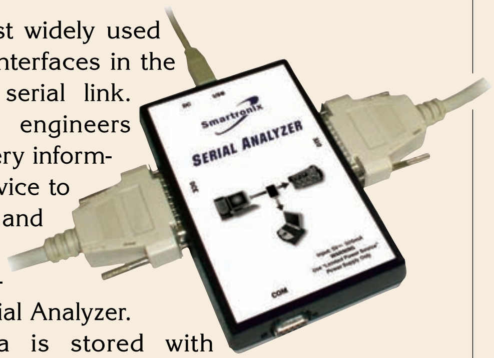

One of the most widely used and popular interfaces in the world today is a serial link. Smartronix, Inc., engineers have developed a very informative, yet simple device to monitor, evaluate, and measure asynchronous serial links — the SMTRX-026 Serial Analyzer.

Captured data is stored with precise time-tags, error status, and handshake line states to troubleshoot a full duplex link. The device allows the host PC to mimic a serial device while capturing the data transaction, to store the full duplex data from DTE and DCE ports. It also allows the serial link to pass straight through the base unit without retransmission, distortion, or delay. The unit also measures serial transceiver voltages to indicate line driver problems.

The unit can be connected preferably by USB or by a standard COM port to a host computer. Windows® software is provided to control the base unit, download and analyze captured data, and to emulate serial device operation. The captured data can then be exported to tools, such as Word or Excel. All cables and adapters are included to connect to standard 9- and 25-pin DTE/DCE devices.

For more information, contact:

SMARTRONIX, INC.
CALIFORNIA, MD
866-442-7767
Fax: **301-866-0528**
Email: **sales@smartronix.com**
Web: **www.smartronix.com**

Circle #108 on the Reader Service Card.

THE WORLD'S SMALLEST MICROCONTROLLER

Microchip Technology, Inc., has released the world's smallest microcontrollers — six-pin packages packing the high performance of the PIC microcontroller architecture into the ultra-small form factor of a SOT-23 package for space-constrained, low-cost applications.

The PIC10F eight-bit Flash microcontroller family debuts with four members (PIC10F200, PIC10F202, PIC10F204, and PIC10F206) that offer 256 to 512 instructions (x12-bit program words) of Flash program memory and 16 to 24 bytes of data RAM memory. These devices also feature a precision 4 MHz internal oscillator, 33 instructions, two stack levels, 25 mA source/sink current I/O, low power (100 nA) sleep current, a wide operating voltage range from 2- to 5.5-volts, one eight-bit timer, a watchdog timer, In Circuit Serial Programming™ (ICSP™) technology, power-on reset, power-saving sleep mode, and (in the PIC10F204 and PIC10F206 only) an analog comparator module. With only six pins, they have

Circle #33 on the Reader Service Card.

a short learning curve for beginners to design with microcontrollers.

Through ICSP technology, these devices can be programmed after placement on a circuit board, enabling field upgrades, system calibration during manufacturing, and the addition of unique identification codes to the system.

The PIC10F family is ideal for applications requiring low pin-count microcontrollers. The small form factor, high performance, and low-cost is creating new applications not traditionally served by microcontrollers:

"Electronic Glue": Discovering a bug in an ASIC or a PCB can have devastating consequences for the design. By including PIC10F devices in a PCB design from the start, bugs, late changes, and other stopgaps can be implemented with ease and little expense for ASICs, the board itself, and for a number of other devices on the PCB.

Logic Control: Traditional standard logic and timing components — such as delays, smart gates, signal conditioning, simple state machines, encoders/decoders, I/O expanders, and small peripheral logic functions — can now be integrated into a six-pin microcontroller.

Waveform Generation: As with replacing standard logic devices, a PIC10F microcontroller can take the place of traditional 555 timers, pulse-width modulators (PWMs), remote control encoders, pulse generation, programmable frequency source, resistor-programmable oscillators, and much more.

The PIC10F family is supported by Microchip's development tools, including the MPLAB® In-Circuit Debugger (ICD2) development tool. The MPLAB ICD2 is a powerful, run-time tool that offers cost-effective, in-circuit Flash programming and debugging from the graphical user interface of the free MPLAB Integrated Development Environment (IDE) software. This enables a designer to develop and debug source code by watching variables, single-stepping, and setting break points. Running at full speed enables hardware tests in real time.

These devices are offered in six-pin, SOT-23 packages. General samples are available and volume production for all four microcontrollers is expected by July. In 10K quantities, the PIC10F200 is $0.49, the PIC10F202 and PIC10F204 are each $0.57, and the PIC10F206 is $0.65.

For more information, contact:

MICROCHIP TECHNOLOGY, INC.
Web: **www.microchip.com**

CALL TOLL-FREE

(800) 292-7711
Orders Only

Se Habla Español

C&S SALES

Secure On-line Ordering @ cs-sales.com

FREE GIFT with online purchase (use coupon code NV)

CALL OR WRITE
FOR OUR
FREE
64 PAGE CATALOG!
(800) 445-3201

Digital Multimeters

Elenco Model M-1750

$24.95

11 Functions:

- Freq. to 20MHz
- Cap. to 20µF
- AC/DC Voltage
- AC/DC Current
- Beeper
- Diode Test
- Transistor Test
- Meets UL-1244 safety specs.

Elenco Model LCM-1950

$59.95

- Large 1” 3 3/4 Digit LCD
- Autoranging Freq. to 4MHz
- Cap. to 400µF
- Inductance to 40H
- Res. to 4,000MΩ
- Logic Test
- Diode & Transistor Test
- Audible Continuity Test

Capacitance Meter

Elenco Model CM-1555

$29.95

- Measures capacitors from 0.1pF to 20,000µF.
- 3 1/2 Digit LCD readout with unit indicator.
- Zero control for test lead compensation.
- Banana jack and special insertion jack included.
- Compact size stand and holster.

Quantity Discounts Available

Elenco Snap Circuits™

Elenco’s new Snap Circuits™ make learning electronics fun and easy. Just follow the colorful pictures in our manual and build exciting projects, such as: FM radios, digital voice recorders, AM radios, burglar alarms, doorbells, and much more! You can even play electronic games with your friends. All parts are mounted on plastic modules and snap together with ease. Enjoy hours of educational fun while learning about electronics. No tools required. Uses “AA” batteries.

5 versions available.
Build up to **500** projects!
As low as
$29.95.

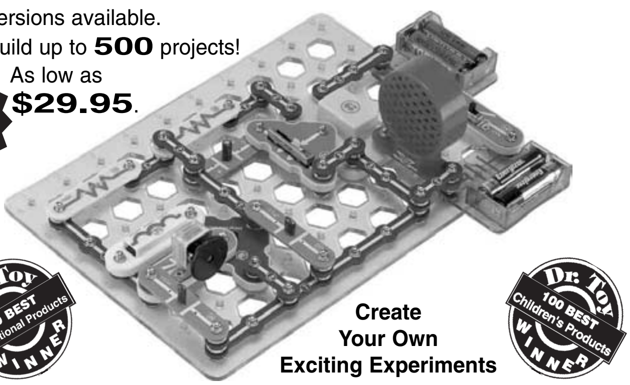

Dr. Toy 10 BEST Educational Products WINNER

Dr. Toy 100 BEST Children's Products WINNER

**Create
Your Own
Exciting Experiments**

Special Offer: Purchase any of our Snap Circuits and receive a **FREE** computer interface kit (Model CI-21) & 20 bonus experiments **($19.95 value)**.

Models Available

SC-500 - *Pro Version*, Contains over 75 parts including voice recording IC, FM radio module, analog meter, transformer, relay, and 7-segment LED display. Build over 500 experiments.	**$89.95**
SC-300S - *Deluxe Version*, Contains over 60 parts. Build over 300 experiments plus 20 bonus computer interfaced experiments.	**$74.95**
SC-300 - *Standard Version*, Same as SC-300S, but without bonus experiments.	**$59.95**
SC-100 - *Snap Circuits, Jr.*, Contains over 30 parts. Build over 100 experiments.	**$29.95**

Test Equipment

**Elenco Quad Power Supply
Model XP-581**

4 Fully Regulated Power Supplies in 1 Unit

$75

4 DC Voltages: *3 fixed;* +5V @ 3A, +12V @ 1A, *1 variable;* 2.5 - 20V @ 2A • Fully Regulated & Short Protected • Voltage & Current Meters • All Metal Case

**Elenco Handheld
Universal Counter
1MHz - 2.8GHz
Model F-2800**

$99

Sensitivity:

- <1.5mV @ 100MHz
- <5mV @ 250MHz
- <5mV @ 1GHz
- <100mV @ 2.4GHz

Features 10 digit display, 16 segment and RF signal strength bargraph.

Includes antenna, NiCad battery, and AC adapter.

C-2800 Case w/ Belt Clip **$14.95**

**Elenco Multi-Network Cable Tester
Model TCT-255**

This tester is a convenient instrument for testing different RJ-11 and RJ-45 connectors and coax cables. Cables can be tested before and after they are installed.

- Mapping Function
- Tests cables before or after their installation.
- Cable Identification (straight or reverse)
- Pair Identification (straight or reverse)
- Open or Short Testing
- Low Battery Indicator
- Auto Power-Off Function (30 s.)

Special
Was ~~$75~~
$39.95

Soft Vinyl Zippered Case (Model C-90) included!

TCT-255K - Multi-Network Cable Tester Kit - **$29.95**

Elenco Oscilloscopes

Free Dust Cover and x1, x2 Probes

2 year Warranty

Special
$299
S-1325 25MHz

S-1330	25MHz	Delayed Sweep	$439
S-1340	40MHz	Dual Trace	$475
S-1345	40MHz	Delayed Sweep	$569
S-1360	60MHz	Delayed Sweep	$725
S-1390	100MHz	Delayed Sweep	$895

DIGITAL SCOPE SUPER SPECIALS

DS-203	20MHz/10Ms/s Analog/Digital	$695
DS-303	40MHz/20Ms/s Analog/Digital	$850
DS-603	60MHz/20Ms/s Analog/Digital	$950

**Elenco RF Generator
with Counter** (100kHz - 150MHz)
Model SG-9500

$239

Features internal AM mod. of 1kHz, RF output 100MV - 35MHz. Audio output 1kHz @ 1V rms.

SG-9000 (analog, w/o counter) **$135**

**Elenco 3MHz Sweep Function
Generator w/ built-in 60MHz
Frequency Counter
Model GF-8046**

Generates square, triangle, and sine waveforms, and TTL, CMOS pulse. **$199.95**

GF-8025 - Without Counter **$99.95**

Elenco Educational Kits

Model FG-600K
1MHz Function Generator
Learn surface-mount soldering.
$32.95

Model AM-780K
Two IC Radio Kit

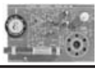

$9.95

Model AK-700

Pulse/Tone Telephone Kit
Flashing Neon Lights
Great School Project
$14.95

Model RCC-7K
Radio Control Car Kit

- 7 Functions
- Transmitter Incl.

$27.95

AK-870
(non-soldering)
$27.95

Model M-1006K

DMM Kit

- 18 Ranges
- 3 1/2 Digit LCD
- Transistor Test
- Diode Test

$18.95

Model K4001

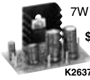

7W Amplifier
$12.95

K2637 - 2.5W Audio Amplifier - **$10.50**

Deluxe Soldering Irons

Elenco SL-5 Series

Electronically controlled, ideal for professionals, students, and hobbyists. Available in kit form or assembled.

Works w/ any iron! Turn any soldering iron into a variable iron.

As Low As $24.95

Features:

- Cushion Grip Handle Soldering Iron (optional) with Grounded Tip for Soldering Static-Sensitive Devices. Easily Replaceable. Uses Long-Life, Plated Conical Tip.
- Heavy Steel, Non-Slip Base.
- Iron Holder Funnel - Reversible, left or right side.
- Steel Tray for Sponge Pad.
- Sponge Pad.

Ordering Information:

Model SL-5 - No iron.
(Kit SL-5K) **$24.95**

Model SL-5-40 - Incl. 40W UL iron.
(Kit SL-5K-40) **$29.95**

Weller® Low Cost Soldering Iron

Model WLC100

$34.95

- Variable power control produces 5-40 watts.
- Ideal for hobbyists, DIYers and students.
- Complete with 40W iron.

Electronic Science Lab

Maximtronix 500-in-1 Electronic Project Lab

Model MX-909

Everything you need to build 500 exciting projects!

- Learn the basics of electronics. 500 different electronic experiments, special lighting effects, radio transmitter and receivers, sound effects, cool games and *MORE*!
- Includes built-in breadboard and an LCD.
- Explore amplifiers, analog and digital circuits plus how to read schematic diagrams.
- Includes 11 parts.
- Lab-style manual included.
- Requires 6 “AA” batteries.

MX-908	300-in-1 Lab	$64.95
MX-907	200-in-1 Lab	$49.95
MX-906	130-in-1 Lab	$39.95
EP-50	50-in-1 Lab	$18.95

$159

Guaranteed Lowest Prices

UPS SHIPPING: 48 STATES 6% (Minimum $6.00)
OTHERS CALL FOR DETAILS
IL Residents add 8.5% Sales Tax

SEE US ON THE WEB → **http://www.cs-sales.com**

C&S SALES, INC.

150 W. CARPENTER AVENUE
WHEELING, IL 60090
FAX: (847) 541-9904 (847) 541-0710

15 DAY MONEY BACK GUARANTEE

2 YEAR FACTORY WARRANTY

PRICES SUBJECT TO CHANGE WITHOUT NOTICE

Circle #75 on the Reader Service Card.

Selected Titles for the Electronics Hobbyist and Technician—

The *Nuts & Volts* Hobbyist Bookstore

Robotics

SUMO BOT

by Myke Predko / Ben Wirz

Here's a fun and affordable way for hobbyists to take their robot building skills to the next level and be part of the hottest new craze in amateur robotics: Sumo competition.

Great for ages 14+, the kit comes complete with:

- Pre-assembled PCB
- Multi-function, dual-channel remote control
- Robot hardware, including collision-sensing infrared LED and receivers
- CD-ROM with programming instructions and file chapters of robot building tips and tricks
- A built-in Parallax BASIC Stamp 2 and prototyping area, allowing hobbyists to create their own robot applications without having to purchase additional Parallax products **$99.95**

Robots, Androids, and Animatrons, Second Edition

by John Iovine

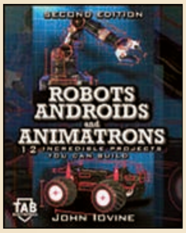

In *Robots, Androids, and Animatrons,* Second Edition, you get everything you need to create 12 exciting robotic projects using off-the-shelf products and workshop-built devices, including a complete parts list. Also ideal for anyone interested in electronic and motion control, this cult classic gives you the building blocks you need to go practically anywhere in robotics. **$19.95**

The Robot Builder's Bonanza

by Gordon McComb

A major revision of the bestselling "bible" of amateur robotics building — packed with the latest in servo motor technology, microcontrolled robots, remote control, LEGO Mindstorms Kits, and other commercial kits. **$24.95**

WE ACCEPT VISA, MC, AMEX, and DISCOVER
Prices do not include shipping and may be subject to change.
Ask about our 10% subscriber discount on selected titles.

Building Robot Drive Trains

by Dennis Clark / Michael Owings

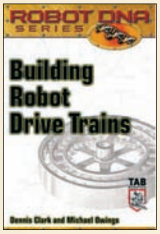

This essential title is just what robotics hobbyists need to build an effective drive train using in expensive, off-the-shelf parts. Leaving heavy-duty "tech speak" behind, the authors focus on the actual concepts and applications necessary to build — and understand — these critical force-conveying systems. **$24.95**

Everything you need to build your own robot drive train:

- The Basics of Robot Locomotion
- Motor Types: An Overview
- Using DC Motors
- Using R/C Servo Motors
- Using Stepper Motors
- Motor Mounting
- Motor Control
- Electronics Interfacing
- Wheels and Treads
- Locomotion for Multipods
- Glossary of Terms, Tables, and Formulas

Electrical Engineer's Portable Handbook

by Robert Hickey

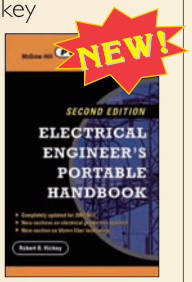

This quick look-up, working tool — packed with tables, charts, and checklists — takes the guess work out of almost any electrical design task or calculation. Indispensable for electrical engineers, designers, and technicians, the *Handbook* provides immediate fingertip access to the fundamental information busy professionals need for everyday use in the field. **$59.95**

Electronics

Build Your Own Printed Circuit Board

by Al Williams

With *Build Your Own Printed Circuit Board*, you can eliminate or reduce your company's reliance on outsourcing to board houses and cut costs significantly. Perfect for advanced electronics hobbyists as well, this easy-to-follow guide is by far the most up-to-date source on making PCBs. Complete in itself, the handbook even gives you PCB CAD software — on CD — ready to run on either Windows or Linux. (Some PCB software costs from $10,000.00 to $15,000.00!) **$27.95**

PSpice for Basic Circuit Analysis

by Joseph Tront

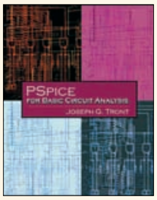

PSpice for Basic Circuit Analysis introduces readers to the fundamental uses of PSpice in support of basic circuit analysis. This book is designed so that the reader can advance rapidly to solve a variety of circuit analyses. Although the fundamental capabilities of PSpice are covered in this book, the principles can be easily extended to analyze the complex electrical and electronic networks used in modern integrated circuit design today. **$24.00**

The Amateur Scientist 2.0 Science Fair Edition

from "The Amateur Scientist" column

This CD contains the complete collection — 73 years — of articles from *Scientific American Magazine*'s legendary column "The Amateur Scientist," plus a second Science Software Library CD with dozens of shareware and freeware programs to feed the passion of any science nut. With over 1,100 projects to challenge science enthusiasts of all ages and skill levels — rated by cost, potential hazard, and difficulty — this is the ultimate resource for anyone interested in home-based science. If that's not enough, it also contains over 1,000 bonus pages of additional how-to science techniques that never appeared in *Scientific American*. Great for science fair students, hobbyists of all ages, and home-schoolers! In fact, *The Amateur Scientist 2.0* contains a special primer for science fair students. Fully text-searchable and packaged in an attractive double-CD case, this remarkable browser-based product runs seamlessly on every platform — Windows, Macintosh, Linux, and Unix.

$24.99 — Subscriber
$29.99 — Non-subscriber

Encyclopedia of Electronic Circuits, Volume Seven

by Rudy Graf

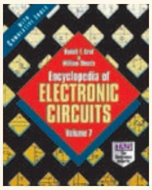

Designed for quick reference and on-the-job use, the *Encyclopedia of Electronic Circuits*, Volume Seven, puts over 1,000 state-of-the-art electronic and integrated circuit designs at your fingertips. This collection includes the latest designs from industry giants, such as Advanced Micro Devices, Motorola, Teledyne, GE, and others, as well as your favorite publications, including *Nuts & Volts*! **$39.95**

Call 1-800-783-4624 today! Or order online at www.nutsvolts.com

Anti-Hacker Tool Kit,
Second Edition

by Mike Shema / Brad Johnson

Get in-depth details on the most effective security tools and learn how to use them with this hands-on resource. A must have companion to the bestselling security book *Hacking Exposed*, this tool kit includes tips and configuration advice for getting the best results from the top hacking tools created and in use today. **$59.99**

The Audiophile's Project Sourcebook: 80 High-Performance Audio Electronics Projects

by G. Randy Slone

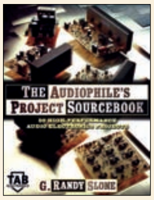

The Audiophile's Project Sourcebook is devoid of the hype, superstition, myths, and expensive fanaticism often associated with high-end audio systems. It provides straightforward help in building and understanding top quality audio electronic projects that are based on solid science and produce fantastic sound! **$29.95**

Electronic Gadgets for the Evil Genius

by Robert Iannini

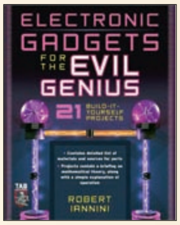

The do-it-yourself hobbyist market — particularly in the area of electronics — is hotter than ever. This books gives the "evil genius" loads of projects to delve into — from an ultrasonic microphone to a body heat detector, all the way to a *Star Wars* Light Saber. This book makes creating these devices fun, inexpensive, and easy. **$24.95**

CNC Robotics

by Geoff Williams

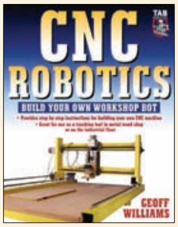

Written by an accomplished workshop bot designer/builder, *CNC Robotics* gives you step-by-step, illustrated directions for designing, constructing, and testing a fully functional CNC robot that saves you 80% of the price of an off-the-shelf bot — and can be customized to suit your purposes exactly because you designed it. **$34.95**

Troubleshooting & Repairing Consumer Electronics Without a Schematic

by Homer Davidson

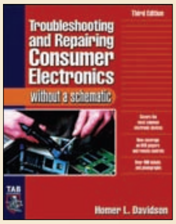

In this book, Homer Davidson gives you hands-on, illustrated guidance on how to troubleshoot and repair a wide range of electronic products — when you can't get your hands on the schematic diagrams. He shows you how to diagnose and solve circuit and mechanical problems in car stereos, cassette players, CD players, VCRs, TVs and TV/VCR combos, DVD players, power supplies, remote controls, and more. **$34.95**

Optoelectronics, Fiber Optics, and Laser Cookbook

by Thomas Petruzzellis

This is a practical guide to one of the hottest fields in electronics and optical circuits. A collection of hands-on experiments and projects for the student, technician, and hobbyist, it explains optoelectronics in nontechnical terms. Projects show how optical circuits work and how to use them in practical and efficient ways. You'll save time, money, and energy with dozens of do-it-yourself projects — from laser alarm systems to high-speed fiberoptic data links. Circuit diagrams, schematics, and complete parts lists accompany each project and an appendix lists suppliers for needed parts. **$29.95**

Schaum's Easy Outline of Electric Circuits

by Mahmood Nahvi / Joseph Edminister

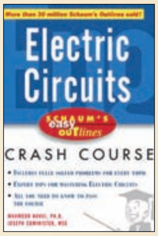

What could be better than the bestselling Schaums Outline series? For students looking for a quick, nuts and bolts overview, there's no series that does it better. Each book is a pared-down, simplified, and tightly focused version of its predecessor. With an emphasis on clarity and brevity, these new titles feature a streamlined, updated format and boil down the absolute essence of the subject, presented in a concise and readily understandable form. Graphic elements — such as sidebars, reader-alert icons, and boxed highlights — stress selected points from the text, illuminate keys to learning, and give students quick pointers to the essentials. **$8.95**

Microcontrollers

STAMP 2: Communications and Control Projects

by Thomas Petruzzellis

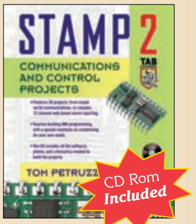

With the help of detailed schematics, informative photos, and an insightful CD-ROM, *STAMP 2: Communications and Control Projects* leads you step-by-step through 24 communications-specific projects. As a result, you'll gain a firm understanding of Stamp 2 and its programming methodologies — as well as the ability to customize it for your own needs and operating system. **$29.95**

High Voltage

Homemade Lightning: Creative Experiments in Electricity

by R. A. Ford

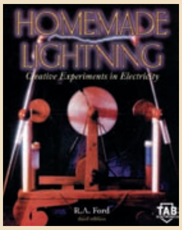

Enter the wide-open frontier of high-voltage electrostatics with this fascinating, experiment-filled guide. You'll discover how to make your own equipment, how electricity is used in healing, and how experiments in high potential physics work! **$24.95**

Home Entertainment

Build Your Own Smart Home

by Anthony Velte

Wow! If you've got the time and inclination, there isn't anything that cannot be automated in your home. This one stop resource uses clear, step-by-step instructions and illustrations to show you how to plan and install smart home systems. Discover projects for automating entertainment systems, home security systems, utilities, and more. **$29.99**

If you don't see what you need here, check out our online store at **www.nutsvolts.com** for a complete listing of the titles available.

by Tom Napier

Build a Simple Digital Synthesizer

Three Cheap Chips Make a Computer-Controlled Synthesizer That Generates Accurate Waves up to 100 kHz

This Month's Projects

The Fuzzball Rating System

To find out the level of difficulty for each of these projects, turn to Fuzzball for the answers.

The scale is from 1-4, with four Fuzzballs being the more difficult or advanced projects. Just look for the Fuzzballs in the opening header.

You'll also find information included in each article on any special tools or skills you'll need to complete the project.

Let the soldering begin!

The output frequencies from audio signal generators are not always either stable or accurately specified. An alternative is Direct Digital Synthesis (DDS). This process creates the desired output from numerical samples and generates any frequency you set with crystal accuracy.

For best results, you need an expensive Numerically Controlled Oscillator (NCO) chip, a fast digital-to-analog converter (DAC), and a low-pass filter.

Provided you don't want too high of a frequency, you can achieve the same result with a $3.00 microcontroller and a $2.00 DAC. With this approach, the most expensive part of the generator is often the device — such as a bank of thumb-wheel switches — used to set the desired frequency. The DDS generator described here eliminates this cost by using a computer's serial port to set the output frequency, either from the keyboard or from a program. The result is a handy bench top signal generator that can also be used as part of an automatic test setup.

Inside a DDS

DDS works by adding a number to an accumulator register at a fixed clock rate. The number in the accumulator steadily increases, overflows, and starts increasing again. The rate of increase and the number of overflows per second is a linear function of the number being added. The cyclic accumulator value can be converted into samples representing a sine wave.

Converting these samples to analog form and low-pass filtering the result generates an accurate sine wave at the rate of one cycle per accumulator overflow. Changing the number added to the accumulator in each time interval changes the output frequency in proportion. Practical output frequencies range from DC to about a third of the clock frequency.

The ratio between the input number and the output frequency is a function only of the clock frequency and the size of the accumulator. These are chosen by the designer to give a convenient frequency setting ratio expressed

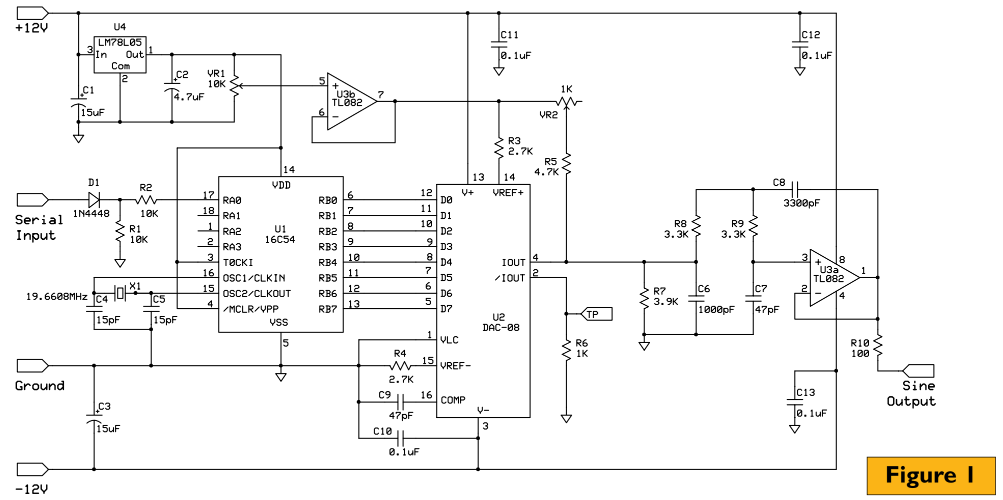

Figure 1

in Hz per unit.

A commercial DDS chip might have a 32-bit accumulator incremented at up to 70 MHz. With a 42.950 MHz clock, for example, we could set any output frequency from DC to about 14 MHz in steps of 1/100 Hz. Each overflow requires a total of 4,294,967,296 to be added to the accumulator. If we add some number (N) 42.950 million times a second, it will take 100/N seconds to generate each overflow, thus N sets the frequency in 1/100 Hz units. If N equals 1,000,000, for instance, the output frequency is exactly 10 kHz. This output will be as accurate and as stable as the crystal clock driving the NCO. If the required frequency is low enough, there will be many samples per output cycle. The sine wave generated by filtering them will be as good as the number of bits per sample allows. A typical NCO chip generates a 12-bit sample every 15 nS. This requires a fast and expensive DAC.

Less Than Perfect

Provided you don't want an RF output, you can get away with much cheaper components. You can emulate an NCO chip in firmware running on a simple PIC16C54 microcontroller. As each instruction takes at least 200 nS and it takes many instructions to implement the accumulator and the sine wave conversion, the effective clock frequency is quite low. The eight-bit output also limits the purity of the output waveform. At low frequencies, it shows distinct steps. Despite these limits, a firmware NCO is a useful signal generator, even well beyond the audio range.

I've designed several PIC-based NCOs. For this project, I decided to go all out for speed, leaving out things like phase modulation (Figure 1). I've used a 16-bit accumulator that limits the scale factor — the smallest frequency change you can make — to 5 Hz per unit. On the other hand, this generator works to 100 kHz. The frequency reference is a 19.6608 MHz crystal driven by the PIC's internal crystal oscillator. Consequently, the scale factor may differ from 5.000 Hz by a few hundred parts per million. If you have a calibration frequency source, you can tune the crystal by using a 30 pF trimmer for capacitor C4. The alternative is to use an accurate 19.6608 MHz crystal oscillator.

Fancy Firmware

Once things have been initialized, the firmware runs continuously around a 15 instruction period loop, generating a sine sample each time around. The loop executes 327,680 times a second, so that is the effective NCO clock

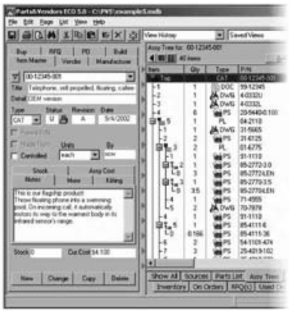

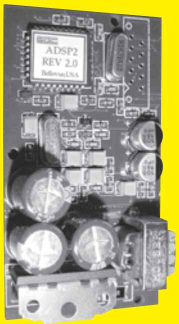

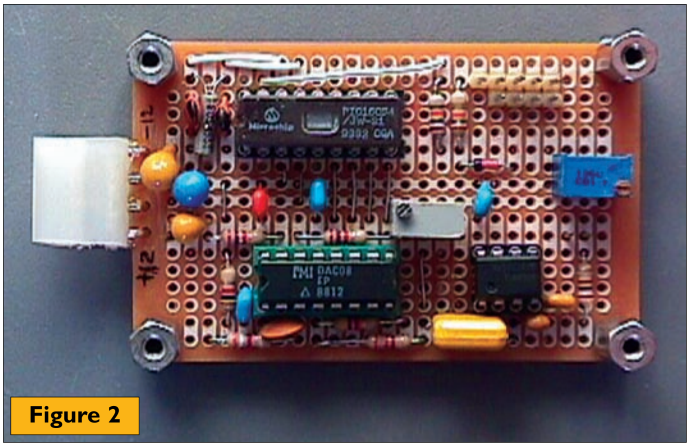

Figure 2

frequency. The 16-bit accumulator overflows every 65,536 units; that's where the scale factor of 5 Hz per unit comes from.

Each loop adds a user selected, 16-bit number to the accumulator. Changing the number being added changes the output frequency. The upper byte of the accumulator is converted into a sample from a sine wave and sent to the PIC's eight-bit port. Once in every loop, the program checks for a user input. The sine conversion uses a 256 byte look up table. Each table entry is a RETLW instruction that specifies the number to be placed in the W register during the return. In previous NCO designs, I've used a 65-entry, one-quadrant table. To generate a full sine wave, the program either reversed the index or inverted the output sample. Here, to speed up the loop, I've used a full 256 byte table. This creates complications, as only the first 256 instructions of the PIC's 512-instruction memory can be accessed either by a CALL instruction or by an indexed jump.

To make the program work, I've taken advantage of several oddities of the PIC16C54's behavior. When the program starts, the first instruction executed is the one at address 1FFH.

Normally, you can ignore this; the PIC executes the NOP at that address, then rolls over to address 0. (I once got into big trouble by putting a data byte in the last program location. Some chips powered up with non-zero return stack contents and wouldn't run.) Here, we use this feature to direct the program start-up to the beginning of the second instruction block.

Another 16C54 oddity is its two-level return address stack. When a return instruction pops an address, the upper stack level contents are copied into the lower level. This means that, once a return address has been stored in the upper level of the stack, you can pop it as many times as you like and you'll always get the same address. This won't work on the more advanced PIC chips and, if you run this code on a PIC emulator program, it will generate a stack underflow warning.

Parts List

Semiconductors

U1	PIC16C54C/JW	Digi-Key	PIC16C54C/JW
	(PIC16C54C-20/P is less, but cannot be reprogrammed)		
U2	DAC0800 DAC	Digi-Key	DAC0800LCN
U3	TL082CP Dual opamp	Digi-Key	296-1780-5
U4	78L05 5 V Regulator	Digi-Key	LM78L05ACZ
D1	Small signal diode, e.g., 1N4448		

Resistors, 5%, 1/4 W

R1	10K		
R2, R8, R9	3.3K		
R3, R4	2.7K		
R5	4.7K		
R6	1K		
R7	3.9K		
R10	100		
VR1	10K potentiometer		
VR2	1K trimmer	Digi-Key	CT94W102

Capicitors (ceramic 5% unless otherwise noted)

C1, C2	15 µF 20V (tantalum)
C3	4.7 µF 10V (tantalum)
C4, C5	15 pF
C6	1,000 pF
C7	47 pF
C8	3300 pF
C9	47 pF
C10 - C13	0.1 µF (20% tolerance OK)

Misc.

X1	19.6608 MHz crystal	Digi-Key	SE3437

DIP sockets (18-pin, 16-pin and 8-pin), Serial port connector as required, 2" by 3" protoyping board, e.g., RadioShack 276-150, etc.

Loops, Fast and Slow

Here's how we take advantage of this feature. First, let's write a conventional program containing a table look up and a jump to restart the loop:

```
LOOP:
  Test serial port
  Step accumulator
  Fetch upper byte
  CALL JUMP
  Sample to port
  GOTO LOOP

JUMP:
  MOVWF   PC

TABLE:
  RETLW  SIN0
  RETLW  SIN1
  and so on
```

The data table actually starts at address 0 and contains the sine samples SIN0 and SIN1 to SIN255. Ignore the stuff which does the real work and look at just the to-and-fro instructions. We have a CALL, an indexed jump (MOVWF PC), a RETLW, and finally a GOTO that restarts the loop. Each takes two instruction periods or a total of eight periods. Can we improve on this? Suppose the address of LOOP has been copied twice to the return stack. Now, every time we execute a RETLW instruction with no prior CALL, we get both a sine sample and a free ride back to the start of the loop. With a minor rearrangement we can write:

```
LOOP:
  Sample to port
  Test serial port
  Step accumulator

Fetch upper byte
  MOVWF   PC

TABLE:
  RETLW  SIN0
  RETLW  SIN1
  and so on
```

By making an indexed jump into the data table with no prior CALL instruction, we force the use of the pre-existing return address, i.e., that of the start of the loop. The table look up and the loop restart are combined, leaving only a indexed jump and a RETLW. That's four instruction periods as compared to eight in the earlier version — a significant increase in speed.

Getting There From Here

How do we write those two return addresses to the stack? This can only be done by executing two CALLs. The first must be in the right place — immediately before the start of the loop. The second, being the destination of the first, must lie in the first 256 instruction block. As all of that block is required for the look up table, it's time for a work-around.

Suppose we put the second CALL at address 0. Whenever the table index is zero — an easy number to detect — we bypass the look up and generate sample SIN0 directly. The DAC input scale goes from 0 to 255, so SIN0 is 128. We put CALL 1 at location 0.

Watch what happens when we start the program. After setting port directions and initializing registers, the program executes the first CALL. That puts the loop address into the first stack level; execution continues with the CALL at address 0. That CALL pushes address 1 onto the stack, but also moves the loop address to the second stack level, where it will remain for ever after.

Doing CALL 1 takes us to the first entry in the look up table, which is RETLW SIN1. (The value of SIN1 is immaterial.) That returns us to address 1, so we execute RETLW SIN1 a second time. This time, the original loop return address has been copied down the stack, so we start executing the loop. From that point on, everything works normally. The final loop is:

```
LOOP:
MOVWF   PORTB
BTFSC   PORTA,SER
GOTO   NEW

MOVF    FREQL,0
ADDWF   PHASL,1
SKPNC
INCF    PHASH,1
MOVF    FREQH.0
ADDWF   PHASH,1
MOVF    PHASH,0
SKPZ
MOVWF   PC

MOVLW   128
GOTO   LOOP
```

Execution normally proceeds via the indexed jump, MOVWF PC, and the look up table. In the special case of a zero index, sample 128 is inserted and the loop is restarted with GOTO LOOP. Both procedures take 15 instruction periods to complete a loop.

Setting the Frequency

When the oscillator is turned on,

it is set to 10 kHz. While generating an output, it is also checking the serial input for a start bit. If it detects one, it stops generating an output and starts looking for ASCII characters at 9,600 baud. “NEW” in the code above is the routine which reads, translates, and stores the user’s new frequency setting value.

This code could be easily changed to suit a higher serial data rate. The input circuit accepts either TTL or RS-232 signal levels. The first character must be a colon. The next five characters are your output frequency in Hertz, with the most significant digit first. Any additional characters are ignored.

For lower frequencies, use leading zeros, e.g., enter :00100 to specify 100 Hz. The least significant digit is rounded to the nearest 5 Hz, :00102 will still generate 100 Hz.

As the PIC can only do one thing at once, any serial input interrupts the output signal. Even a non-colon character will cause a millisecond blip in the output. Sending a colon turns the output off. You can turn the original frequency back on by sending a non-numerical character — even a second colon. Entering a new frequency at 9,600 baud generates zero output for some 6 mS before the new frequency starts. This generator is better at generating test tones than sweet music!

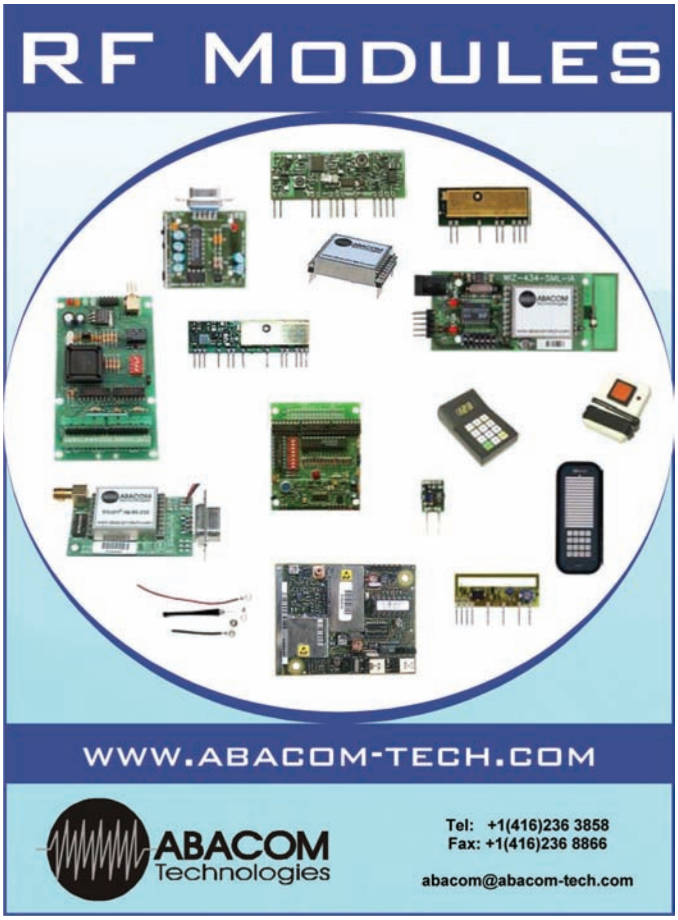

Analog Matters

The eight-bit samples from the PIC Port B are turned into an analog current by a cheap and readily available 16-pin DAC. This was originally known as the PMI DAC-08, but is now more commonly found as the National DAC0800. It splits a reference current into two outputs that range from 0 to 2 mA and 2 mA to 0, respectively, as the digital input varies from 0 to 255. One output makes a handy test point. The other is offset to be balanced about 0 volts and drives the low-pass filter. Trimmer VR2 sets the mean voltage to exactly zero.

The nominal output amplitude is 4 V pk-pk. The figure shows a pot (VR1) to set the output amplitude by changing the reference voltage. If a fixed output is acceptable, VR1 can be omitted. You can achieve amplitude modulation by driving U3b from a 0-5 V signal source. A TTL input here keys the output on and off.

A Fix-up Filter

The raw DAC output consists of rectangular steps and so contains a wide range of frequencies. Only two really matter. One is the output frequency itself (fo) and the other is the lowest image frequency at (clock-fo). As the clock is 328 kHz, this unwanted frequency can be as low as 228 kHz. At audio frequencies, the image is close to the clock frequency and can be ignored. At frequencies closer to 100 kHz, we need an output filter that will pass the signal but greatly reduce the amplitude of the image.

A three-pole active filter works adequately and is a lot less expensive than an LC filter, whose millihenry inductors would cost more than the chips. The finite width of the output samples causes a natural roll-off in the output amplitude, some -1.4 dB at 100 kHz. The filter response peaks a little to compensate. For proper filter operation, the buffer amplifiers should be much faster than the signal. A transition frequency of 4 MHz is about as low as one can go. Their slew rate and high frequency output swing also limit how fast and how big of an output you can have. I’ve tried several amplifiers and found that the TL082 gives good results. The output — with its 100 ohm safety resistor — can drive a 50 ohm load at a reduced amplitude.

The DAC and output amplifier run from ±12 V. On my computer, this is provided by the serial port; users of other computers must make their own arrangements. The 78L05 regulator provides +5 V power to the PIC and the DAC reference voltage. If a stable +5 V supply is available, the 78L05 can be deleted. In a pinch, you can run the board from +-5 V, but the maximum output swing will be reduced.

The 16C54 must be programmed with the code PICNCO.OBJ, which is available from the *Nuts & Volts* website’s FTP library (**www.nutsvolts.com**). If you plan on never reusing the microcontroller, you can save several dollars by buying a one time programmable chip rather than the UV erasable one. **NV**

Electronics – from Australia??!!
You have to be kidding, right?

No, not at all!

The hobby electronics market in Australia has been historically very strong with large numbers of enthusiasts serviced by dynamic electronic magazines and vigorous commercial suppliers.
The most dominant company in this "Down Under" market, Jaycar Electronics, is now in a position to offer its great range of products to a wider audience, thanks to the Internet.

More info?
www.jaycarelectronics.com

Concerned about dealing on the Internet?

Well, you should be. At the same time, the amount of legitimate internet trade exceeds the fraudulent trade by millions and millions to one. World internet trade today easily exceeds the Gross National Product of many large countries!
Jaycar has been doing business on the Internet now for over 10 years. The thousands of happy repeat customers on our files is a testimony to how safe it can be when you deal with a reliable supplier like us. Worried about freight costs? NO NEED with our great rates.

New 2004 Catalog - all 424 pages

We have a brand new catalog priced in US Dollars crammed with over 6000 exciting products. You can get one FREE by logging on to our website and filling out the catalog request form at www.jaycarelectonics.com/catalog (Offer valid till October 2004).

FREE
424 page
Catalog

We Stock:

- A huge range of exciting kits
- A great range of robotic components
- The best range of electronic components
- The largest single-source range of gadgets
- Security, Surveillance, Audio/Video, Lighting, Computer & Telecoms Parts etc.

Check our website!

- Entire Jaycar 2004 Catalog on-line – over 6000 products.
- 128-bit Secure on-line ordering – safe & secure.
- Express ordering.
- Search by category, keyword or catalog number, & advanced search.
- Over 3500 product datasheets & application notes available on-line.

This is a built up Theremin from a Jaycar kit. The Theremin is a weird musical instrument that was invented early last century but is still used today. The Beach Boys hit: "Good Vibrations" featured the Theremin. You can have one of these kits (cat no. KC-5295) for $25.90. All kits have first class instructions written in clear English text with plenty of illustrations and component identification.

www.jaycarelectronics.com

1800 784 0263

(Monday - Friday 09.00 to 17.30 GMT + 10 hours only)
For those that want to write:
100 Silverwater Rd Silverwater NSW 2128 Australia

Jaycar Electronics

Circle #80 on the Reader Service Card.

by Gerard Fonte

Mr. E. MacHine: The Enigma Machine

Lightning in the Palm of Your Hand — Safely!

This is one of those things that seems just a little interesting at the start, but, as you look closer, it gets stranger and stranger. It's a simple, plain, plastic box. It has a knob, LED, and power connector. When you turn it on, it doesn't seem to do anything at all. It just sits there. However, put an empty soda can on the machine and lightly rub it with a dry finger. The can vibrates. Yet, this does not happen with a stationary finger or a damp finger. Now, put your hand on the plastic box and hold the soda can in your other hand. Have someone else brush the can with a dry finger. Surprise! They feel the can vibrate. Something is passing through the plastic box, through you, through the can, and into the other person. It turns out that this and other effects are not well documented. In fact, some of these effects appear to be completely unpublished. A great deal of research was necessary to get this information.

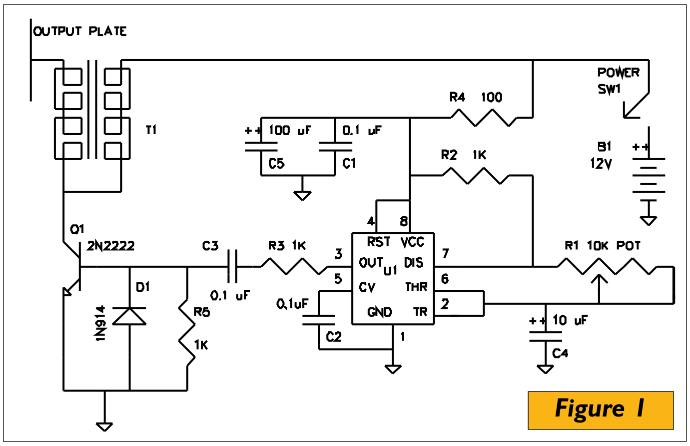

Figure 1

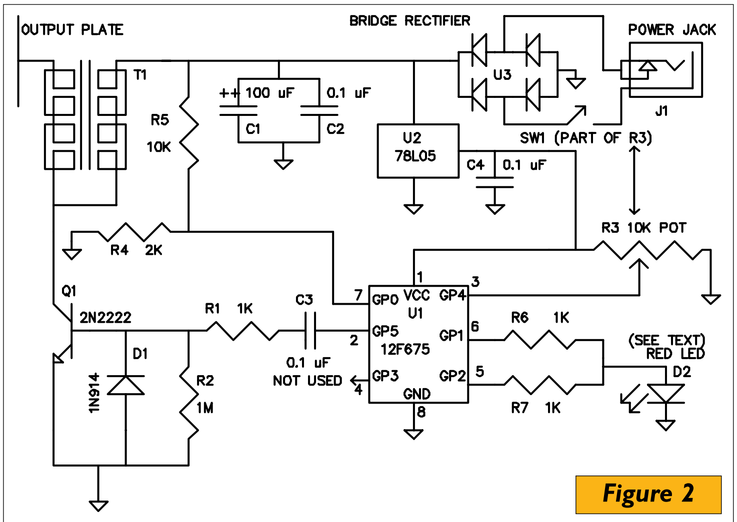

Figure 2

This is the first of four parts. Here, we'll look at the hardware. We'll see that the Enigma Machine generates a high voltage pulse (about 1,200 volts) that is insulated and isolated so that virtually no current flows. This allows us to play with high voltage safely. This article presents two versions of the machine. The first is a "project" version. The second is a "product" version. (For a discussion of the difference, see my "In the Trenches" article in the January 2003 issue of *Nuts & Volts*.)

The second and third parts will present experiments you can do, as well as explain the basic physics behind the experiments. In the last part, we will examine the related fringe science topics. We'll look at Kirlian photography and the life "aura" associated with it. Additionally, we'll see reasonable answers to some of their strange claims. We'll also look at ELF (Extremely Low Frequency) and other health-related effects. Finally, we'll touch on some leading edge research.

Mr. E. MacHine

Let's look at Figure 1. This is the schematic diagram for the project. Actually, this was the prototype design and was used for proof of concept tests. The basic core of the system is a 555 timer (U1) that is wired as a free-running multivibrator (also known as an oscillator). It produces a rectangular output on pin 3. The frequency of operation is about 10 to 500 Hz, depending on the setting of R1. The basic circuit (U1, R1, R2, C2, and C4) is the common configuration found in all the data books. Capacitors C5 and C1 stabilize the power supply to the device. Resistor R4 plays a vital role in this as well, but we'll discuss it later.

The output from U1 goes to a switching circuit composed of R3, R5, C3, D1, and Q1. The basic idea is to have the transistor turn on only for a very short time. The output of the 555 stays high for too long. So, we AC couple it through C3. This creates a positive pulse on the rising edge of the 555 output and a negative pulse on the falling edge. Since we don't want a negative pulse going into Q1, the diode (D1) is used to steer that to ground. The width of the positive pulse is controlled by the R/C network of C3 and R5. These are chosen to turn on Q1 for about 100 µS. Resistor R3 is used to limit the drive current. Too much current causes Q1 to oscillate and waste energy. The transformer is the major player of the circuit. It converts 12 volts to about 1,200 volts. I looked around at various flyback and other types of transformers and settled on a 12 volt automobile ignition coil because they were readily available and generally less expensive.

We now see that the circuit is really quite simple. It generates a pulse that turns on an electrical switch that lets the full battery current flow through the step-up transformer. However, at first, it didn't work very well. It turned out that when the switch (Q1) was turned on, the battery voltage sagged and the 555 timer didn't work properly. This is where R4 comes in. It isolates U1 power from the battery terminal voltage. The resistor forms an RC network with C5 (and to a much lesser extent C1). This limits current OUT of C5 when the battery voltage sags. This added resistor made the circuit operate as desired.

But Why Doesn't Q1 Burn Out?

There is no current limiting resistor. Full power goes through the 1 Ω primary winding of T1 to the collector of the transistor and then directly to ground and there's no inductive kick-back protection diode either! Won't this circuit fail? Actually, the circuit is operating well within specifications. Remember the pulse is only 100 µS long. This makes the AC resistance (reactance) of the coil much higher. In fact, careful current measurements show that the current through the coil has a maximum value of between 300 and 400 mA (depending on pulse rate and battery voltage). These measurements were made using a 3 amp power supply instead of batteries. The transistor is rated at 500 mA of continuous current

Parts List for Figure 1 Schematic

Resistors (1/4 watt, 5%)

R1	10K potentiometer
R2, R3, R5	1K
R4	100

Capacitors (25 volts)

C1, C2 C3	0.1 µF
C4	10 µF
C5	100 µF

T1	12 volt automobile ignition coil (generic, see text)
Q1	2N2222 transistor (see text)
D1	1N914 diode
U1	555 timer IC
SW1	SPST power switch
B1	12 volt battery

Misc. Plastic case, 3" x 5" x 7" (RadioShack P/N 270-1807 includes metal plate)
Metal plate for top of case
Aluminum foil
Knob for R1
Battery holder
PC prototyping board
Wire, solder, etc.

Parts List for Figure 2 Schematic

Resistors (1/4 watt, 5% unless specified)

R1, R6, R7	1K
R2	1M
R3	10K potentiometer with switch (Mouser 31CQ401)
R4	2K 1%
R5	10K 1%

Capacitors (50 volts)

C1	100 µF
C2 - C4	0.1 µF

Everything Else

Q1	2N2222 transistor (see text)
D1	1N914 diode (optional, see text)
D2	Red LED (see text)
U1	PIC16F675 9-pin flash microcontroller
U2	78L05 low-power 5 volt regulator
U3	Bridge rectifier
T1	12 volt automobile ignition coil (generic, see text)
SW1	SPST power switch (part of R3)
J1	2.1 mm power jack (Jameco 151589CA)

Misc.
Plastic case 3" x 5" x 7" (RadioShack 270-1807 includes metal plate), 9 volt to 12 volt AC adapter (see text), metal plate for top of case, aluminum foil, knob for R3, PC prototyping board, wire, solder, etc.

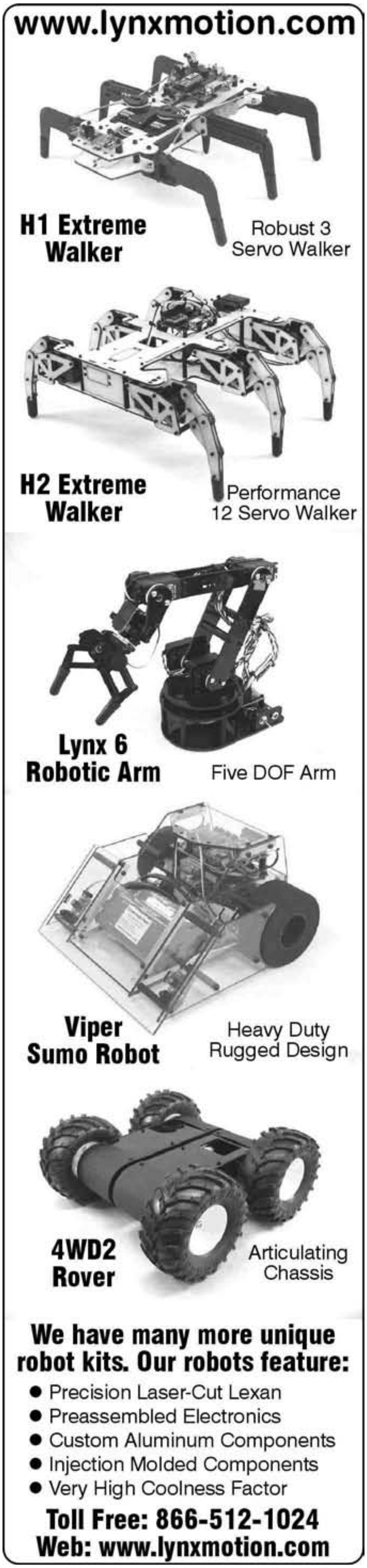

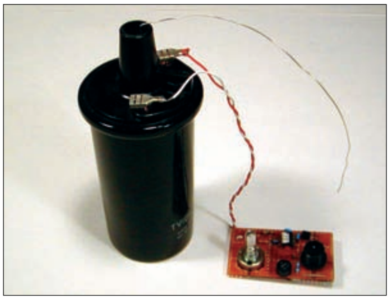

Figure 3. Completed electronic assembly. The PCB mounts to the plastic case and the power jack.

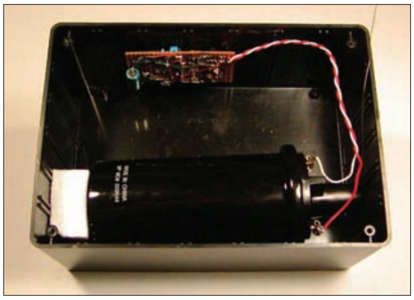

Figure 4. This shows the PCB mounted in place. White "styrofoam" holds the coil in place.

and, in this application, the current is not continuous.

At the maximum pulse rate of 500 Hz and pulse width of 100 µS, the actual "on" time of the transistor is only 5% (50 mS per second). Thus, the average current is only 5% of the maximum — 15 to 20 mA. The result is that Q1 doesn't even get warm. Careful measurements also showed that the inductive kick-back was minimal. There was only a 50% increase over supply voltage. So, for a 12 volt supply, the kick-back was only 18 volts. The reverse breakdown voltage for the 2N2222 is 30 volts. The 2N2222A version has a 40 volt breakdown voltage. It is important that this switching circuit be built as shown. Different transistors have different ratings and different operating characteristics. Different resistors and capacitors will cause different pulse widths and different currents into the transistor. Unless you know precisely the effect a change will make, don't do it. Safety first! While low current, 1,200 volt pulses are probably not dangerous, it's not a good idea to take chances. (Note: D1 can be any small signal or low-voltage rectifier diode as long as the forward voltage drop is 0.7 volts or less.)

The Output Plate

The output plate is just some aluminum foil taped to the *inside* of the plastic cover. (See Figure 5). This isolates the electrical path to ground because the cover is plastic. Since there is no path to ground, no current can flow. This makes experimenting with the high voltage safe. (We'll look at measuring the real current in a later article.)

The Benefits of a µC

Figure 2 shows the schematic diagram of the product version of the Enigma Machine. Let's look at the differences and why they were made. The first and most obvious change is that U1 goes from being a 555 timer to a PIC 12F675 flash microprocessor (µC). At first, this seems wrong. The µC costs about $1.25 while the 555 costs about $0.25. We've increased costs by about $1.00, but it buys a huge amount of flexibility, reliability, safety, and additional features. It turns out that this $1.00 is a very good investment.

The benefits of the µC start with the output pulse. Instead of converting an edge to a 100 µS pulse, we can directly create one. What's more, our µC pulse is not dependent on external capacitors. Instead, the internal µC clock is used. That gives us a pulse-width variation of only 2% from unit to unit. (With the 555 timer, the variation in capacitor values is typically 10 to 20%.) It also improves reliability. The timer version wouldn't work with EXAR manufactured 555 timers (because of R4). It's never good to need or avoid "the same" parts from specific manufacturers. The analog-to-digital (A/D) converter on the µC allows us to measure the supply voltage and determine if it is appropriate. If the voltage is incorrect, the µC can shut down the system. This significantly increases safety and, lastly, the µC can control an LED and make it flash if something is wrong.

How the µC Version Works

There are a number of circuit changes between the project version in Figure 1 and the µC product version shown in the Figure 2 schematic diagram. Let's look at the power supply first. Instead of a battery, we have a power jack. This can connect to either an external battery or an AC adapter.

I always get annoyed because I never have the right adapter. I figured others did, too. The addition of U3 — a bridge rectifier — allows the use of any polarity adapter. Even AC can be used. The µC requires 5 volts. Since this is also the reference for the A/D, it has to be regulated. Thus, the need for U2. It's a low power, three-terminal, 5 volt regulator. Capacitors C1 and C2 stabilize the input voltage and are especially needed if AC is used (to reduce ripple).

The µC reads the voltage across R3 to determine the pulse rate. It can vary from 7.8 Hz to 256 Hz, according to the setting. The switch on R3 is used to turn the unit on and off. Another channel of the A/D reads a portion of the actual input voltage through the voltage divider made up of R4 and R5. This presents 1/6 of the input voltage to the A/D. Since the µC is operating at 5 volts, this limits our input voltage to 30 volts. Anything more than 30 volts will present more than 5 volts to the µC pin. It isn't good to have pin voltages greater than the supply voltage.

Resistor R6 limits the current to the LED. The software controls how the LED lights. A steady glow indicates everything is okay. A slowly flashing LED (about 1 Hz), says that the input voltage is too low. A rapidly flashing LED (about 5 Hz) says the input voltage is too high. If the input voltage is either too high or too low, the µC doesn't send any pulses to the switch, so no high voltage is created.

There is also a special function for this LED. It's used as a voltage reference. It turns out that, as the supply voltage is reduced below 7 volts, U2 fails to regulate and the voltage to the µC drops. This means that the A/D reference drops, as well. This causes problems in determining the actual supply voltage, but, since the voltage across a red LED is constant, this can be used as a reference. (Different colored LEDs have different forward voltages. A red LED is required here.) This LED voltage is fed back into an A/D pin on the µC. If this voltage appears to rise in relation to the internal V_{CC} voltage, then it really shows that the internal V_{CC} voltage is dropping. This, in turn, means that U2 is no longer regulating properly. The software will then act appropriately by flashing the LED slowly. The switch circuit looks very similar to the 555 version, but there are a number of differences.

Capacitor C3 is for safety rather than pulse shaping. It prevents the transistor from being turned on and kept on if there is a hardware or software malfunction on pin 2. Clearly, if Q1 is turned on and kept on, it will burn out.

Safety also works in the other direction. If Q1 shorts out, then the full supply voltage flows through the base of the transistor. Without C3, that voltage would enter U1 and destroy it. R1 helps in this failure mode, as well, by limiting the current. Resistor R2 is increased to 1M from 1K. This is because it is no longer used to form an R/C network. Rather, it keeps Q1 turned off in the absence of any pulse. Otherwise, the base could float and be susceptible to noise.

Software

The software is trivial. Functionally, it operates as follows:

Use the A/D to read the LED voltage and supply voltage and determine actual supply voltage. If the supply voltage is too high, flash the LED once quickly and go to 1. If the supply voltage is too low, flash the LED once slowly and go to 1. Use the A/D to read the setting of R3 and determine the pulse rate. Send out a 100 µS pulse and wait, depending on rate. Then, go to 1.

The source code is available on the *Nuts & Volts* website's FTP library (**www.nutsvolts.com**), but it's so simple you should do it yourself for practice.

Assembly Instructions

It is strongly recommended that the specified case be used (RadioShack P/N 270-1807). It is the proper size and includes a metal cover that we will use as the metal plate for later experiments. Remember, whichever case you use, the "output plate" is just aluminum foil attached to the *inside* of the plastic cover. The only electrical connections that pass through the case are the power connections.

Concerning the layout and construction of the prototype "product" circuit, there are a few special notes. A standard pad-per-hole prototype board is used and cut to size (2.6" by 1.4"). Standard point-to-point wiring was used. Resistor R3 (the 10K pot) is mounted from behind, so that the solder

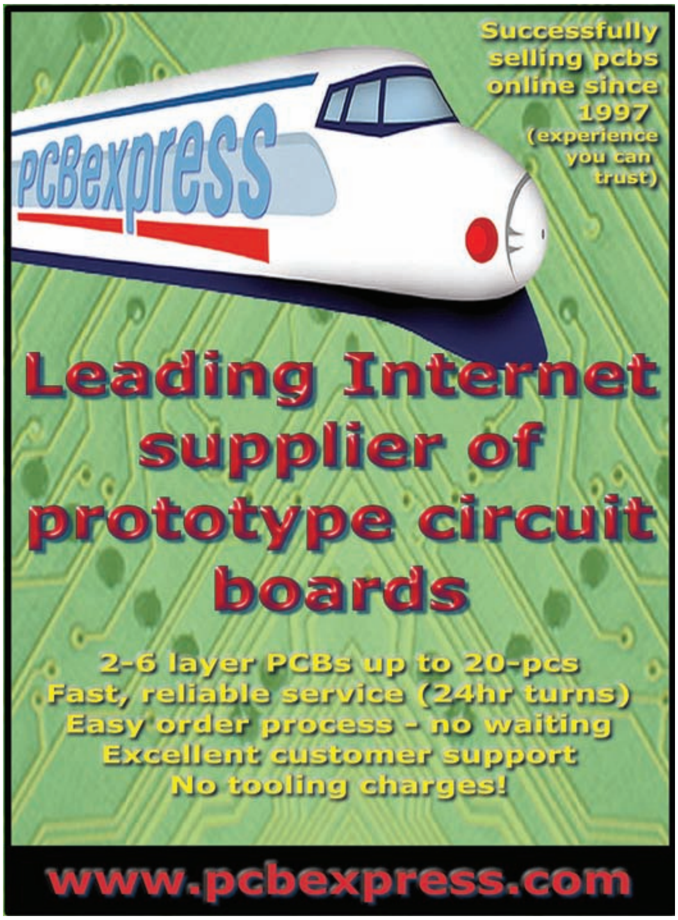

Figure 5. The last piece of foam is in place. The high voltage wire goes over the top of the foam and presses against the foil inside the plastic cover.

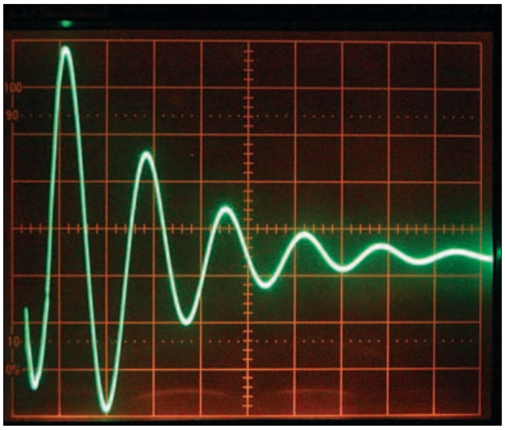

Figure 6. The high voltage output pulse has a classic inductive ringing shape.

terminals are flush with the board and they are soldered to the pads. The LED and power jack are mounted on the same center line with the LED center, 1.850” from R3 center, and the power jack opening center, 1.500” from R3 center.

The power jack sits lower than the pot. To compensate for this, you can use the printed circuit board (PCB) slots extending from the side of the case as a 0.050” spacer, if you like. If you do, the pot will align between another pair of slots. There are height considerations for the components because the PCB is mounted to the case with the nuts for R3 and the power jack. The board to case spacing is 0.175” maximum. This means C1 must be mounted on the back of the board. Also, an ordinary socket cannot be used for U1 (the µC) — with the chip inserted, it’s too tall. You could solder U1 directly in place or you can make your own socket, like I did, by using separate socket-pins and reaming out the holes so they sit lower.

Figure 3 shows the completed electronics. You can more easily see that the power jack is the back-mounting type with a nut that goes through the panel. Discrete wires connect the coil to the PCB. My coil had quick-connect contacts. Yours may have screw connections. There is a bare wire coming from the high voltage output of the coil. The electrical contact there is usually held in place with a screw. Just unscrew it, put a loop of bare wire (I used 24 gage) around the screw, and screw it back into place.

In Figure 4, you can see the start of the mechanical assembly. The PCB is mounted to the side of the case, with the mounting hardware for R3 and the power jack. Notice the PCB slots and mounting of C1 on the back of the PCB. A piece of white plastic foam (the type formerly called styrofoam) is wedged between the base of the coil and the case. More plastic foam holds the coil in place. Additional foam holds the coil in place. You could use a plastic clamp or strap. Don’t use metal because it could cause an exposed ground and current could flow. I liked the foam because no additional case work was required. You can also see R3, LED, and power jack details.

Figure 5 shows the last piece of foam that holds everything in place. If you look closely, you can see the high voltage wire that comes up from the left side and runs over the top of the foam. I pushed the free end of the wire into the foam to hold it in down. This wire makes physical contact with the aluminum foil “output plate” that is taped to the inside of the plastic cover. I used a couple of strips of double-sided cellophane tape and ordinary aluminum foil. The final product’s graphic overlay is color printer artwork with clear, 2” wide cellophane tape over the top for protection. It’s attached to the case with more double-sided cellophane tape.

Finally, Figure 6 shows the high voltage output (horizontal is 100 µS per major division). It’s a textbook example of a ringing inductor. Peak voltage is about 1,200 volts.

Troubleshooting

First, verify you are getting a pulse out (either from the 555 or µC). If not, check the power, wiring, or software. If you are getting a pulse, you can verify the high voltage by connecting a small neon lamp from the high voltage output to ground. It should blink at the pulse rate. You can also bring an oscilloscope lead *near* the high voltage output terminal. You should see a ringing signal with the probe about 1/2” away. If you are getting pulses out and no high voltage, the problem is isolated to the switching circuit or T1.

Mr. E. MacHine

That’s all for this month. I was planning to have kits and assembled units available through a third party. Unfortunately, that didn’t work out. If there is a reasonable demand for kits (at about $50.00) or assembled units (about $80.00), I’ll see what I can do about providing them myself. (If you want to distribute them, let me know.)

Mr. E. MacHine, by the way, is pronounced, “Mystery Machine.” Capitalizing that one letter really changes our perception of the word. It’s interesting that women are generally much faster at catching the joke than men. **NV**

Enigma Safety Notice

1. This article deals with high voltage and high voltage effects. When built and used as described, it is felt to be completely safe. Improper use and construction can cause electrical shock.

2. Several experiments demonstrate effects that pass through the body of the user. Therefore, it is not recommended that anyone with a pacemaker or other embedded electrical device participate in these experiments, nor should it be used in very close proximity to any electrical equipment where electromagnetic interference could cause safety concerns.

3. Several experiments have shown subtle biological effects on plants after continuous exposure of days to weeks.

by Paul Florian

An Analog Sine Wave Signal Generator

No Project Bench Should Be Without One!

A sine wave signal generator can be used to measure the frequency response of filters and amplifiers. Simply connect the signal generator to the input of the circuit under test and adjust the output of the generator to an appropriate amplitude. Next, measure the output voltage of the circuit at various frequencies with an oscilloscope. A frequency response graph can then be plotted with this data.

A sine wave signal generator can also be used to tune active or passive filters. The generator is connected to the input of the filter and the output is observed on an oscilloscope. For example, to set the corner (-3 dB) frequency of a lowpass filter, adjust the sine wave generator to the desired corner frequency and tune the circuit until the output voltage is 0.707 multiplied by the input voltage. Similar techniques can be used when tuning highpass bandpass, band reject, and notch filters. Furthermore, FM signals can be produced by using the output of the sine wave generator as a modulation source for a VCO (Voltage Controlled Oscillator).

The circuit in Figure 1 is a schematic of such a generator. The heart of the circuit is the ICL8038 precision waveform generator chip. One of two tuning frequency ranges is set by S2. The first is Low Frequency (10 Hz to 1,000 Hz) and the second is High Frequency (1,000 Hz to 100 kHz). An oscilloscope or frequency counter is needed to set the output frequency and an oscilloscope is needed to measure output amplitude. The amplitude control (R6) sets the output from 0 Vpp to 10 Vpp, while the coarse and fine controls set the operating frequency.

Description

The power supply to the circuit consists of +12 VDC and -12 VDC linear regulators. When S1 is closed, D3 rectifies the positive half of the 19 VAC and is filtered by C3. This produces about 30 VDC at U3's input. The U3 regulator provides +12 VDC at its output. During the negative portion of the 19 VAC, C6 charges to -30 VDC and the output of U4 is -12 VDC.

As mentioned earlier, the ICL8038 (U1) is a precision sine wave generator. Its operating frequency is determined by resistors R1-R4 and C1-C2. The Coarse (R2) and Fine (R1) controls determine the output frequency for a given oscillator capacitor (C1 or C2). When C1 is selected by S2, the output frequency can be adjusted from 1,000 Hz to 100 kHz. If C2 is selected by S2, the output frequency is variable from 10 Hz to 1,000 Hz. If available, 1% tolerance capacitors should be used for C1 and C2. If 5% or 10% tolerance devices are used, you may have to experiment with different capacitors to obtain the appropriate output frequencies.

U2B has a gain determined by R5 and R6. The maximum amplitude of 10 Vpp occurs when R6 is set at 10K. This allows the output at U2B to be adjusted anywhere from 0

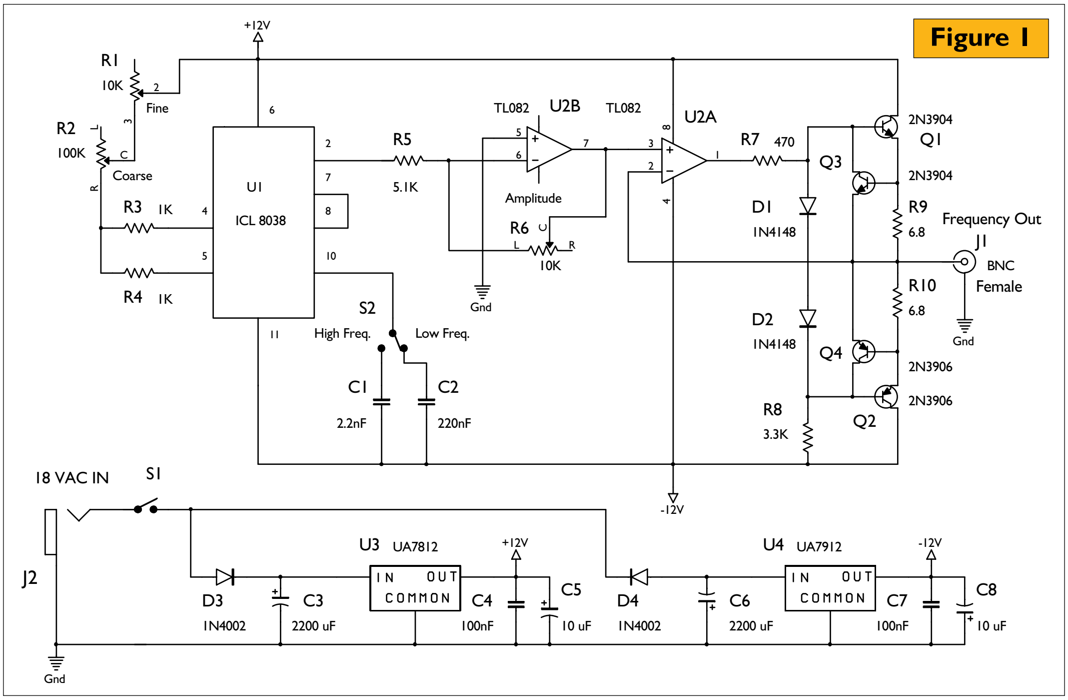
Figure 1

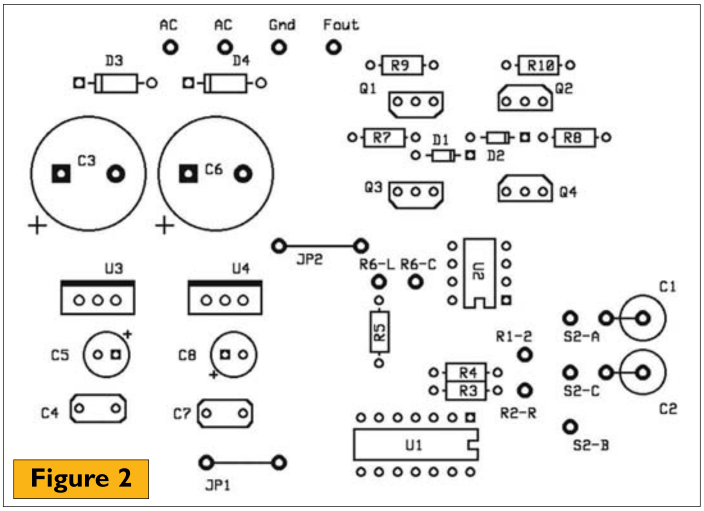

Figure 2

Vpp to 10 Vpp. U2A is a buffer that drives the output stage formed by Q1 to Q4. The output at J1 is a sine wave of the same amplitude and frequency at U2A pin 3. In addition, Q3, Q4, R9, and R10 provide output current limiting of ±100 mA. This will protect the output transistors if there is a short circuit condition.

Construction

Obtain a PCB with dimensions that are 3 x 4 inches. After the PCB holes are drilled, use Figure 2 to locate component placement. Solder jumper wires JP1 and JP2. Next, solder the IC sockets for U1 and U2, being careful to note correct orientation. Make four three-pin sip sockets from the breakaway sip stick and solder them in the holes of Q1-Q4. Solder the diodes and resistors.

Finally solder U3, U4, and capacitors (note that C1 and C2 are axial leaded capacitors installed vertically). Attach the heatsinks to U3 and U4. You may download the PCB pattern from the FTP library on the *Nuts & Volts* website (**www.nutsvolts.com**) and cut it out. Then center and tape it to the bottom of the case. Mark the location of the four mounting holes with a punch and drill 1/8 inch diameter holes. Center and mark the location of the mounting holes for S2, R2, R1, R6, and J1 on the front panel and drill appropriately sized holes. The potentiometer holes should be spaced a minimum of one inch on centers. Also make a hole for J2 on the reverse side of the case.

Mount the switch S1 on R6. The following connections each use 6 to 8 inch lengths of wire. Solder a wire from J2 to one of the AC pads on the circuit board (refer to Figure 2). Another wire from J2 is soldered to one terminal of switch S1 and the other side of switch S1 connects to the remaining AC pad on the PCB. Cut 1-3/8 inch of shaft length from R2 and R6. Break off the keying posts of R2 and R6 with pliers. Examine Figure 3 for the potentiometer designations.

The pin numbers for R1 are marked on its case (R1 is a 10 turn potentiometer). Connect R1-3 to R2-C. Then, connect R1-2 and R2-R to the appropriate pads on the PCB. Wire R6-L and R6-C to the PCB. Connect S2-A, S2-B, and S2-C from S2 to the circuit board. Check Figure 4 for switch terminal assignments. Attach two wires to J1 and mount in the case. Solder the ground wire of J1 to the Gnd pad on the PCB and connect the center conductor of J1 to the pad marked Fout.

Now, mount R1, R2, R6, S2, and J2 to the case. The notch on S2 should face down. Attach the knobs on R2 and R6.

Testing

Verify that U1, U2, and Q1-Q4 are not installed. Plug in the 19 VAC wall transformer connector into J2. Close S1 by rotating R6 clockwise. Check for +12 VDC between U1 pin 8 and U2 pin 5 (Gnd). Next, check for -12 VDC between U1 pin 11 and U1 pin 5. If these voltages are not measured, there may be a problem with the installation of D3, D4, U3, or U4. Once the proper voltages are established, install U1 and U2. Attach an oscilloscope probe at U2 pin 3. Turn the amplitude control (R6) fully clockwise.

The oscilloscope should show a measure of 10 Vpp. If this is not measured, there may be a problem

with the installation of R5 or R6. Keeping the probe on U2 pin 3, set S2 on high frequency (switch position up). The output frequency measured should be variable from 1,000 Hz to 100 kHz by turning R1 and R2.

Likewise, when S2 is on low frequency (switch position down), the frequency can be varied from 10 Hz to 1,000 Hz by adjusting R1 and R2. Once these conditions are met, install Q1-Q4 into their sockets (refer to Figure 2). The output at J1 should match the signal at U2A pin 3.

Now, check the output current limiting. Connect J1 to a 10Ω 2W resistive load. Then, measure the voltage across the resistor with an oscilloscope. Increase the amplitude until the sine wave output starts to clip. The should occur at 2.0 Vpp. If this is not the case, check for proper installation of Q1-Q4, D1, D2, and R7-R10. Q1-Q4 are mounted in sip sockets for easy replacement, in case they still manage to get fried.

Once the unit is fully operational, install the PCB in the case using eight 1/4 inch 4-40 screws and four 1/2 inch 4-40 threaded nylon spacers.

Finally, attach the lid using the screws included with the case.

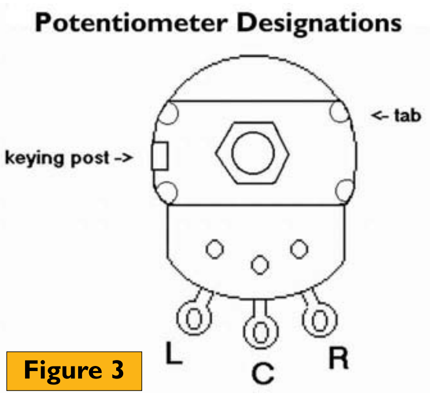

Figure 3

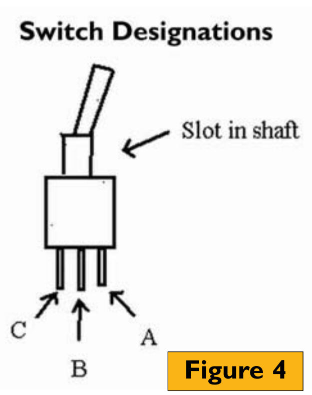

Figure 4

Summary

Now that the unit is fully assembled, it can be used as a sine wave signal generator. This device is good for testing circuits in the audio frequency range. For frequencies above 20 kHz, there will be slight frequency drift in the output signal. The Coarse and Fine controls allow for precise frequency adjustment and the output is adjustable from 0 Vpp to 10 Vpp. Furthermore, the unit is short circuit protected at ±100 mA. This signal generator is a useful addition to any electronic hobbyist's bench. **NV**

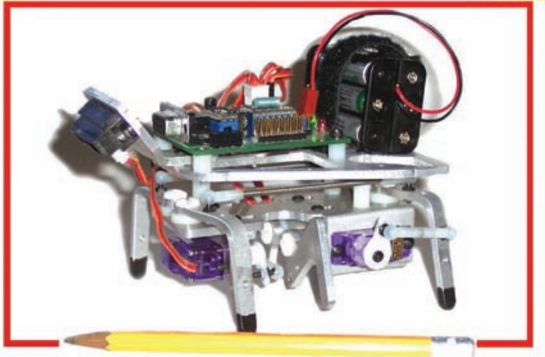


PIC/AVR
Prototyping boards, system boards and MultiPros
1-(866)869-6883
maxtrol.net


Everything you need to build your own ...
MOBILE ROBOT
Sonar Units
Vision Systems
Motor Drivers
Optics
Microprocessors
Artificial Intelligence
Web Controls
Zagros Robotics
www.zagrosrobotics.com
PO Box 460342, St. Louis, MO 63146
(314) 768-1328 info@zagrosrobotics.com


www.Primecell.com
Battery rebuilding service
Dead Batteries ? Don't toss them.
Send them to us - our rebuilds are better than original specifications.
Tools
Hilti Skil
Milwaukee
Panasonic
B&D DeWalt
Makita All
2-36 Volts
Electronics
Bar Code
Scanners
Surveying
Printers
Laptops
Photography
Uniden
BC 2500 1800 mAh
Radios
APELCO
UNIDEN
G.E. ICOM
KENWOOD
MOTOROLA
MIDLAND
MAXON
YAESU
ALINCO
Visit www.primecell.com for important details
24 Hr Secure recorder tel-fax (814) 623 7000
Quotes email: info@primecell.com
Cunard Assoc. Inc. 9343 US RT 220 Bedford PA 15522


ActiveWire® USB
Simple USB Interface!
- Works with MacOS 8/9, Win98/2K/ME/XP FreeBSD and Linux!
- 24Mhz CPU core with USB
- Firmware downloadable via USB
- 16 bit parallel Input/Output
- See web-site for add-on boards
- All drivers, manuals, demos are on our web-site for immediate download!

$59
plus shipping
ActiveWire, Inc.
www.activewireinc.com
ph +1.650.465.4000 fax +1.209.391.5060

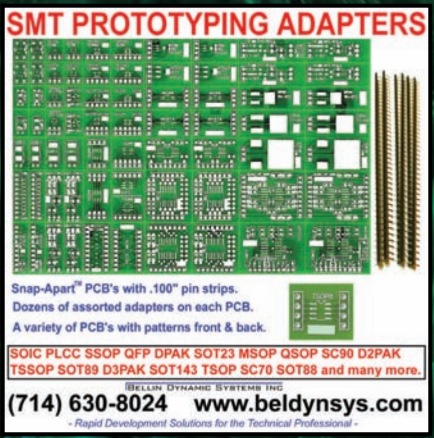
SMT PROTOTYPING ADAPTERS
Snap-Apart™ PCB's with .100" pin strips.
Dozens of assorted adapters on each PCB.
A variety of PCB's with patterns front & back.
SOIC PLCC SSOP QFP DPAK SOT23 MSOP QSOP SC90 D2PAK TSSOP SOT89 D3PAK SOT143 TSOP SC70 SOT88 and many more.
BELLIN DYNAMIC SYSTEMS INC
(714) 630-8024 www.beldynsys.com
- Rapid Development Solutions for the Technical Professional -


Put Your Devices on the Internet
(and in local networks too)
Networking isn't just for PCs. Learn how to design and program small devices that exchange data via TCP/IP, host Web pages that respond to user input, communicate using e-mail and FTP, and much more!
Embedded Ethernet and Internet Complete
Designing and Programming Small Devices for Networking
Jan Axelson
Embedded Ethernet & Internet Complete
by Jan Axelson, author of *USB Complete*
ISBN 1-931448-00-0 $49.95
Lakeview Research www.Lvr.com

Electronics Showcase


Microtech Source, Inc.
Your #1 Source For Micros
PIC12C508A-04/P $0.75
PIC12C509A-04/P $1.00
PIC16C56A-04/P $1.30
PIC16C56-RC/P $1.89
PIC16C621A-04/P $1.35
PIC16C622A-04/P $1.50
MC68HC705C8ACP $3.95
27C64 $0.99
GAL16V8 $0.99
AT90S2313 $2.00
N/C PUSH BUTTON SWITCH $0.20
3 PIN TOGGLE SWITCH $0.35
AC POWER CORDS $0.85
WHOLESALE PRICES AVAILABLE!!!!
MANY MORE ITEMS NOT LISTED.
CALL TODAY:
TEL:(305)264-6860
FAX:(305)264-0228


Why Reinvent the Wheel?
We have Hundreds of Electronic Circuits and Kits that can integrate directly into your projects.
- Motor Contollers
- Remote Control
- Relay Boards
- Data Acquisition
- Temp Contoller
- Test Equipment
- Timers
- Amplifiers
- Solar
- Wind
- Hydrogen
- Robots

And much more ....
ElectronicKits.com
Carl's Electronics Inc. sales@ElectronicKits.com

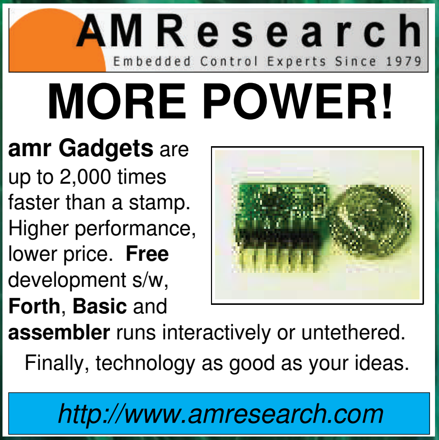
AMResearch
Embedded Control Experts Since 1979
MORE POWER!
amr Gadgets are up to 2,000 times faster than a stamp. Higher performance, lower price. **Free** development s/w, **Forth**, **Basic** and **assembler** runs interactively or untethered.
Finally, technology as good as your ideas.
http://www.amresearch.com


YOU KNOW YOU WANT ONE
Build A Combat Robot!
Your One-Stop Robot Shop
- Motors
- Batteries
- Radio Controls
- Speed Controllers
- Materials
- Wheels
- Drive Components
- Hobby Kits

plus: Toys, Videos, Books, and more!
www.RobotMarketPlace.com


SINGLE BOARD COMPUTER
CD Juke Box
Photo Viewer
Point of Sale
(Quickbooks)
GeoFlex266
System Development Kit
(Linux or Windows)
See our Web Site 4 Applications
www.autotime.com
Autotime, 6605 SW Macadam, Portland Or. 97239


CUSTOM PLASTIC PARTS
Mold manufacturing. Production of injection molded parts. No order too small or too big. Very competitive on high labor parts. For very small orders we can inject your parts on manual low pressure machines.
CUSTOM METAL STAMPING
We manufacture our own tooling
Site: www.vandvmachy.com
email: victor@vandvmachy.com
USA Office: V & V Mach. and Equip. Inc. 14019 Whispering Palms Dr.
Houston, TX 77066, PH. 281 397 8101, Fax. 281 397 6220.
Mexico Plant: Marketing Tech. De Mex. SA de CV. Alamo 93
Cuarto Piso, Santa Monica, Tlal. Edo. De Mexico, 54040
Tels. 011 52(555) 314 5325 & 011 52(555) 360 3648
Fax. 011 52(555) 361 5996.

INERTIAL SENSORS

GYROPAK^3
1 Axis MEMS Angular Rate Gyro
Solid State MEMS Sensor
Sensitivity: ±30-400°/sec
Temp Sensor Output
Easy Mounting
Small: 20mm^2 X 0.35"
Easy to use Analog Output

GYROCUBE^3
3 Axis - 6 DOF Analog MEMS IMU
Silicon MEMS Sensors
Rates: ±30-400°/sec
Accel: ±1-10g
Low Cost
Analog Output: 0-5V
1.25" X 1.20" X 0.65"

AVIATION ▪ MARINE ▪ AUTOMOTIVE ▪ VR
NAVIGATION ▪ ROBOTICS ▪ MOTION CONTROL

O·NAVI™ LLC
INERTIAL SENSORS • MICRO AVIONICS
TEL: 877-722-6688 sales@o-navi.com
Visit us at: www.o-navi.com

- Accelerometer / Tilt Sensors
- Angular Rate Gyros
- Compass / Magnetometers
- Analog & Digital IMUs
- GPS/Autopilot Systems
- Custom Design Available

QKITS.COM

NEW USB I/O Experimenter Board #VM110 $59 US
Comes assembled and with USB cable.

NEW Proximity Card Access Controllers #AL2730F $79 US
Independent access controllers w/ editable card tables.
Controllers can support up to 2730 access cards.
PC access controllers w/ time recorder software also available.

NEW 15 Ch. I/R Transmitter & Receiver kit $59 US
4 addresses allow multiple receivers in one room.

NEW 8 Ch. RF Transmitter & Receiver kits $79 US
8 addresses allow the use of multiple receivers.
433MHz operation, range 50 yards in open.

1-888-GO 4 KITS
GREAT PRICES, GREAT SHIPPING RATES
49 McMichael St., Kingston, ON, K7M 1M8, CANADA

uMMC

- Create, Read and Write to FAT16/32 files
- Easy to use, simple protocol
- Directories supported
- Long filenames supported
- Up to 4 files open, using file handles

TTL Serial Interface

$59.95
QTY 1
OEM $30 QTY 1K

ROGUE robotics
(416) 707-3745 Phone
(647) 439-1577 Fax
sales@roguerobotics.com
www.roguerobotics.com

Are you missing something?

You can order back issues of *Nuts & Volts* at
www.nutsvolts.com
or call us at
800-783-4624
Stock up today!

GET YOUR IDEA INTO SHAPE WITH
SHAPELOCK™
Rapidly Create Mechanical Prototypes
Parts, Brackets, Housings, Molds, Etc
Amazing Plastic Melts in Hot Water
Locks Rigidly at Room Temperature
Super Strong, Tough, Safe, Reusable
250 Grams for $14.95 plus S/H
Free Sample Offer and Information:
WWW.SHAPELOCK.COM

Wireless A/V Transmitter/Receiver Kits

ASK-1204TR 1.2 GHz, 1W, 4 Channel System
149/set
- *Super high power*
- *Standard transmit range 1000'*
- *Built-in switcher for auto scan*
- *miniature size*

$99/set
ASK-2008TR 1.2/1.7/2.4 GHz, 50 mW, 8 Channel Systems
- *Transmit range up to 800'*
- *12 Channel Available*
- *Built-in channel switcher for auto scan*
- *1000 mW booster optional*

Call for Custom Frequency

Matco, Inc. www.matco.com
Sales:(800)-719-9605 Fax:(847)-303-0660

Special products and services for the electronics enthusiast.

TETSUJIN 2004

This groundbreaking, cutting edge powered exoskeleton competition is sponsored by our sister publication, *SERVO Magazine*. Check out the articles *SERVO* is publishing highlighting the technologies involved in the project design. Details for the competition, which will be held this fall, can be found at:

www.servomagazine.com

PRINTED CIRCUIT BOARDS

QUALITY PRODUCT
FAST DELIVERY
COMPETITIVE PRICING

- UL approved
- Single & Double sided
- Multilayers to 8 layer
- SMOBC, LPI mask
- Reverse Engineering
- Through hole or SMT
- Nickel & Gold Plating
- Routing or scoring
- Electrical Testing
- Artwork or CAD data
- *Fast* quotes

We will beat any competitor s prices!!!

10 pcs (3 days)
1 or 2 layers $249
10 pcs (5 days)
4 layers $695
(up to 30 sq. in. ea.)
includes tooling, artwork, LPI mask & legend

PROTOTYPE THROUGH PRODUCTION
PULSAR, INC
9901 W. Pacific Ave.
Franklin Park, IL 60131
Phone **847.233.0012**
Fax **847.233.0013**
Modem **847.233.0014**

yogii@flash.net · flash.net/~yogii

FEEL LIKE YOU MISSED THE BOAT? YOU DID!
BUT YOU CAN STILL GET ON BOARD!

Back issues of the premiere issue of SERVO Magazine and The Nuts & Volts of Amateur Robotics are available for purchase — but supplies are limited.

Call 800-783-4624 and use your credit card or order online at www.servomagazine.com
STOCK UP TODAY!

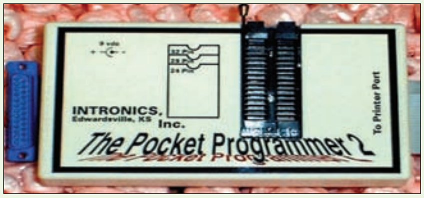

The Pocket Programmer **Only $149.95**

The portable programmer that uses the printer port instead of a internal card, with easy to use Windows software that programs E(E)prom, Flash & Dallas Ram.

Intronics, Inc. • Tel. (913) 422-2094
Box 12723 / 612 Newton / Edwardsville, KS 66111
Add $8.00 COD
WWW.IN-KS.COM Visa/MC/Amex/Disc

DSP

Learn DSP and have fun! *By using MATLAB and your PC soundcard, you can get results instantly and anchor concepts that might be difficult to grasp otherwise.*

The inspiration for this idea came from my students. Teaching DSP is difficult because you must slog through a fair amount of math before getting useful results. I noticed that, during my lecture on Z transforms, most students had donned their Walkmans/MP3 players. Their eyes were rolling. I needed drastic measures to turn this around. So, why not use the students' love of music as a tool for teaching DSP? (Yes, I loved the movie *The School of Rock*.)

MALAB has a whole set of DSP-like features that you can use in a visual environment called SIMULINK. One can import WAV files and manipulate them easily with filtering, etc. I decided that an easy and convincing experiment would be for students to take their favorite songs, record them as WAV files, and then filter them using DSP. Simple Low Pass Filters can be used to band limit the signal and monitor quality.

In order to conduct this experiment, I asked all of my students to bring their normal portable music device (Walkman, Discman, MP3 player, etc.) to the lab. Windows Sound Recorder was used to convert the output of the music device to an appropriate WAV file. Figure 1 shows a typical setup. A tape player headphone output is connected to the PC sound card microphone input via a jumper cable (male audio plug to male audio plug).

Equipment Requirements

- PC with Windows 95/98/XP/2000 (See Note 1.)
- Windows Sound Recorder application
- MATLAB/SIMULINK 6.5/R13 with DSP Toolbox (See Note 2.)
- Portable Music Device: Walkman, Discman, MP3 player, etc.
- Male audio plug to male audio plug jumper cable
- Sound card with speakers or external amplifier

Windows Sound Recorder

I asked the students to record 30-second takes using varying sampling rates and bit resolution. A typical selection is shown in Table 1. The students can then play these files back through Sound Recorder (Figure 2) to find the effects of various sampling rates and resolutions. Depending on the original quality of the music, the lowest sampling rates/resolution give the lowest quality.

After the files are tested, they are moved to the MATLAB/Work directory. The MATLAB program is followed by Simulink (button on the MATLAB toolbar just under Help), as shown in Figure 3. In Simulink, a new file model is opened and placed adjacent to the Simulink Library Browser. The DSP Blockset is found and the following blocks are moved to the open model file:

- From Wave File (Platform Specific I/O — Windows)
- Digital Filter Design Tool (Filtering — Filter Designs)
- To Wave Device (Platform Specific I/O — Windows)

Matlab/Simulink Environment

The modules are joined using the mouse. By clicking the "From Wave File" box, the music files can be accessed

Figure 1. Equipment Setup

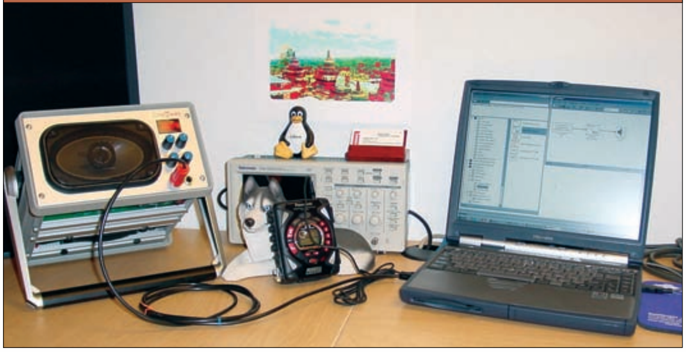

Figure 2. Windows Sound Recorder

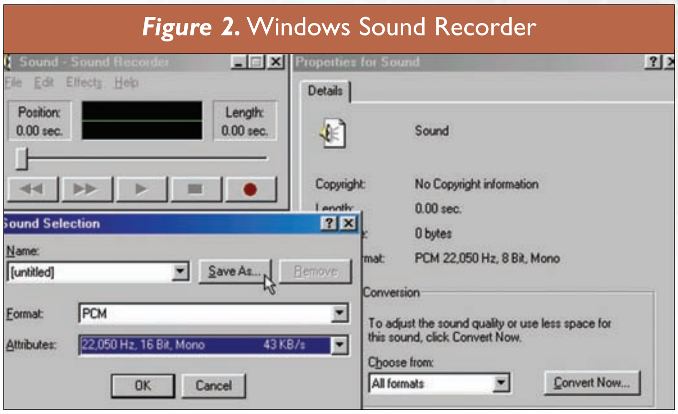

Position: 0.00 sec.
Length: 0.00 sec.

Sound

Copyright: No Copyright information

0.00 sec.

0 bytes

PCM 22,050 Hz, 8 Bit, Mono

Name: [untitled]

Format: PCM

Attributes: 22,050 Hz, 16 Bit, Mono 43 KB/s

To adjust the sound quality or use less space for this sound, click Convert Now.

Choose from: All formats

WITH MATLAB AND A PC SOUNDCARD

by Jeremy Clark

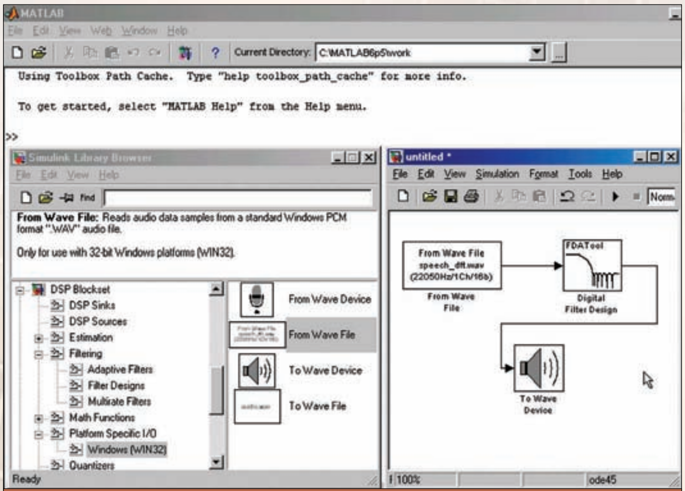

```
Using Toolbox Path Cache.  Type "help toolbox_path_cache" for more info.

To get started, select "MATLAB Help" from the Help menu.

>>
```

From Wave File: Reads audio data samples from a standard Windows PCM format ".WAV" audio file.

Only for use with 32-bit Windows platforms (WIN32).

Figure 3. Matlab/Simulink Environment

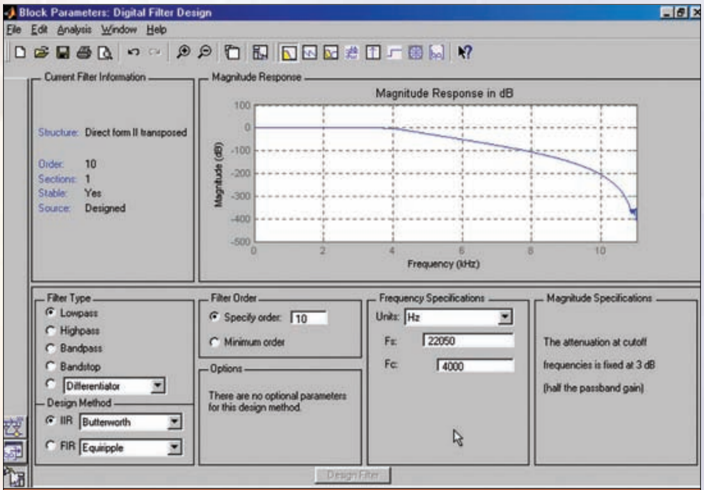

Structure: Direct form II transposed

Order: 10

Sections: 1

Stable: Yes

Source: Designed

Filter Type: ● Lowpass ○ Highpass ○ Bandpass ○ Bandstop ○ Differentiator

Design Method: ● IIR Butterworth ○ FIR Equiripple

Filter Order: ● Specify order: 10 ○ Minimum order

Options: There are no optional parameters for this design method.

Units: Hz

Fs: 22050

Fc: 4000

The attenuation at cutoff frequencies is fixed at 3 dB (half the passband gain)

Figure 4. DSP Theory

by just typing in the correct file name. Note that they must be stored in MATLAB/work directory. The digital filter can be set up by clicking that module. Various filters can easily be designed. A simple Butterworth low pass filter can be implemented to filter the music. The effects of cutoff frequency can be convincingly demonstrated (Figure 4).

DSP Theory

The block diagram in Figure 5 shows the DSP process. An input analog waveform X(t) is first low pass filtered to an upper frequency less than or equal to half the sampling frequency (Nyquist sampling theorem). This signal is then fed to an analog to digital converter. The converter samples the input waveform at the sampling frequency and with resolution nbits/sample. The binary samples X(n) are then presented to the DSP process. The DSP process performs the required operation. This operation is represented by the DSP difference equation or equivalent Z transform. The output of the process Y(n) is then reconverted back to the analog domain by the Digital/Analog converter. The final low pass filter ensures that all alias components caused by the DSP process are removed.

The music files in analog format are converted to binary samples via Windows Sound Recorder. These WAV files are non-compressed pulse code modulation binary samples. The MATLAB environment inputs these digital samples to a DSP algorithm represented by the digital filter. The output samples are then converted back to analog by the sound card D/A and low pass filter. **NV**

Figure 5. The DSP Process

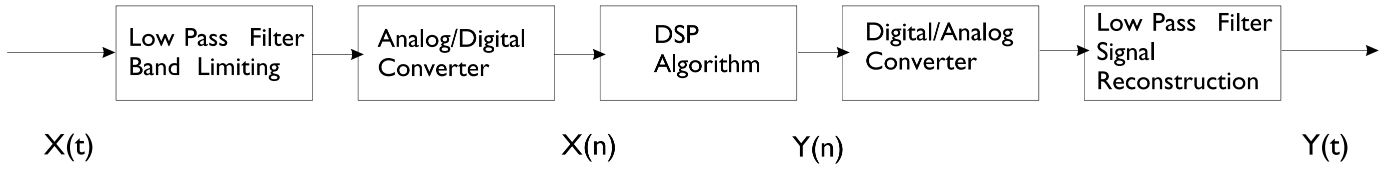

Notes

Note 1: Matlab, Simulink, and the DSP Toolbox are also available on the Linux platform.

Note 2: Matlab, Simulink, and the DSP Toolbox can be obtained on a 30-day free trial by referring to the following web page: **www.mathworks.com/web_downloads/request.html**

File Name	Sampling Rate	Resolution	Nyquist Max. Base Band Freq	Composite Bit Rate
music_8_8.wav	8 kHz	8 bit	4 kHz	64 Kbit/sec
music_22_16.wav	22.05 kHz	16 bit	11.025 kHz	352.8 Kbit/sec
music_44_16.wav	44.1 kHz	16 bit	22.05 kHz	705.6 Kbit/sec

Table 1

WORKING WITH DIGITAL FILTERS

by Peter Best

Most of the books and technical papers that describe digital filtering consist mostly of complex mathematical concepts with little to no emphasis placed on the practical implementation of a physical digital filter. The math behind digital filtering techniques is indeed interesting, but you don't have to be a mathematician to design and build a working digital filter. Keep reading and I'll prove it to you.

Poles and Zeros

Digital filter theory and the math that accompanies it describe the process of placing a number of poles and zeros at strategic locations in complex mathematical planes to obtain a desired filter response. For filter designs that are realized in the mathematical S plane, the filter response is called the system function (Hs). The system function is actually based on the division of two sets of complex polynomials.

Mathematically, the poles of a filter are the roots of the system function's complex polynomial denominator and the filter's zeros are the roots of the system function's complex polynomial numerator; this results in the system function Hs. The poles and zeros are represented physically by resistors, capacitors, and opamps. Digitally, poles and zeros and their placement in a plane are represented by firmware-resident coefficients and a filter kernel.

Figure 1. This low-pass filter impulse response plot contains 70 points or taps that we could use as coefficients in a digital filter algorithm.

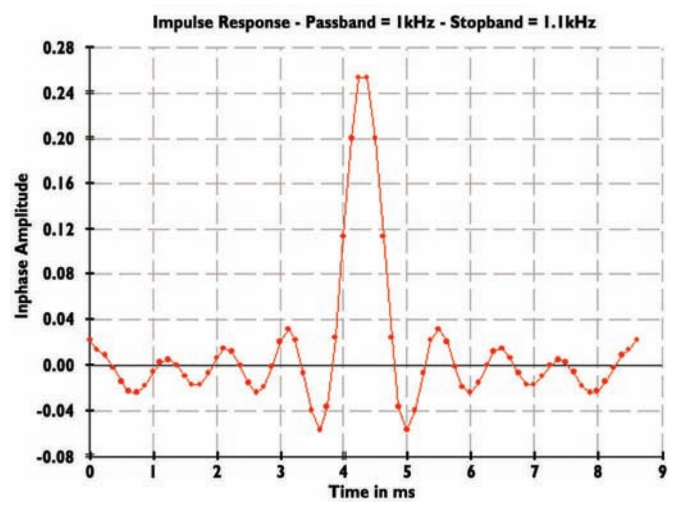

A filter kernel is really the impulse response of the filter. Mathematically, an impulse is a spike of sorts that occurs at time = 0 with infinite positive amplitude. In addition, a mathematical impulse has no width and a total area that is equal to 1. Applying an impulse to a filter — which excites the filter equally at all frequencies — results in a response from the filter — which is the filter's impulse response. We care about impulse response because a filter's impulse response plot contains the points (the filter kernel) we use for coefficients that are used in our digital filter firmware algorithm. A typical low-pass filter kernel or impulse response plot can be seen in Figure 1.

The best way to describe poles and zeros is to imagine a square yard of very flexible rubber stretched horizontally, one inch above a piece of plywood. The stretched rubber is the mathematical plane S. A zero is formed in the plane by placing a thumbtack through the rubber, into the plywood. The tack forms a depression in the rubber that is shaped like a funnel cloud. This is a zero and mathematically it extends infinitely negative.

Frequencies in the plane that are close to zero points are attenuated. If you placed two tacks (zeros) six inches apart and pulled up the rubber in the center between the tacks, you will create a pole between the two zeroes. Frequencies near the poles in the planes are amplified. Mathematically, a pole extends infinitely positive. Imagine being able to tack down areas and pull up areas of the rubber plane to adjust the attenuation and amplification of certain frequency areas. That's what poles and zeros do.

Filter order is determined by the number of poles the filter contains. For instance, a filter with two poles is termed a second order filter. More poles and zeros mean more code; thus, more time will be needed to evaluate the filter kernel and incoming data samples in a digital filter. For an analog filter, the number of poles and zeros determines how much hardware you're going to be assembling. The more poles and zeros that are included in the analog filter design, the more resistors, capacitors, and opamps you'll have to add to create them.

The tradeoff for an increased number of poles and zeros (filter order) for both digital and analog filters is better filter response. For instance, a simple RC low-pass filter (Figure 2a) contains a single pole. The Sallen-Key filter configuration in Figure 3 has two poles. Because filter gain and filter output impedance can be controlled, the Sallen-Key active filter will perform better than the simple passive RC filter network. A second pole can be added to the RC filter by simply adding a second RC filter at the output of the first RC filter, as shown in Figure 2b.

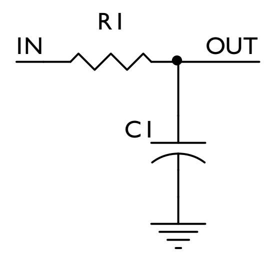

Figure 2a. If an impulse is applied to this circuit, the time taken for the output to ramp up to the input voltage is determined by the size of the resistor. The higher the resistance, the longer it takes to charge the capacitor, thus, the slower the ramp up process.

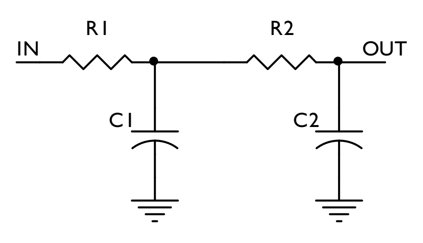

Figure 2b. You can only do this up to a point. Every additional RC stage adds additional loading on the output side of the filter with minimal payback. If you must cascade filter elements, it is better to use active opamp filters that can be easily made to control filter gain and filter output loading while adding more responsiveness to the filter.

Since there are no zeros in either the Sallen-Key or the RC filters I've described, they are called all pole filters. Mathematically, the numerator of the system function Hs for the RC and Sallen-Key all pole filters is 1, as all of the work is done with poles, the roots of which are found in the denominator of the system function.

All of this pole and zero talk is important, as poles and zeros determine how a filter responds and we, as humans, have names and generic S-plane pole-zero plots we can tie to those generic filter responses. We won't be plotting pole and zero functions during the course of our digital filter design, as it isn't a necessary process in the generation of our digital filter. Instead, we'll use Microchip's Filter Lab application to put the poles and zeros in the correct places and compute the values of our Sallen-Key filter components. If you want to take a look at some pole-zero plots, one of the best application notes I've seen that illustrates the pole and zero concept with actual three-dimensional color plots is the Dallas/Maxim application note APP 733.

Filter Basics

There are three common filter types that are used to describe the behavior of both digital and analog filters. The three filter models — or approximations — are called Chebyshev, Bessel, and Butterworth. You'll sometimes see Chebyshev spelled in many other ways, including Tschebyshceff. To understand the characteristics of each of the filter types, you must first understand the terminology used to describe a typical digital or analog filter.

A filter will pass signals at their maximum amplitude in an area known as the filter's passband. Conversely, a filter will severely attenuate and block signals in its stopband area. A high-pass filter passes frequencies above its cut-off frequency and blocks them below its cut-off frequency. A low-pass filter passes signals below its designed cut-off frequency and blocks them above the cut-off frequency. A bandpass filter passes signals that are inside a particular frequency range and a bandstop filter blocks signals in a frequency range. All of these filter types have one thing in common. They can all be derived from a low-pass filter design.

A high-pass filter is the spectral inversion of a low-pass filter. To spectrally invert a filter kernel, you only need to apply opposite signs to each filter kernel point and add 1 to the center filter kernel sample. I used an application called ScopeFIR to generate the low-pass filter kernel in Figure 1 and its spectrally inverted high-pass kernel in Figure 4. The physical low-pass filter configurations in Figures 2 and 3 can be converted to high-pass filter configurations by simply swapping the locations of the resistors and capacitors. Now that you've generated a high-pass filter from a low-pass filter kernel, you can take it a step further and add the low-pass kernel and the high-pass kernel you just generated to form a bandstop filter.

No matter which filter model you choose, the ideal filter would have absolutely no frequency gap between the passband and stopband. This no-gap scenario is called a brickwall response, which is envisioned as a theoretically perfect filter with a vertical drop of the attenuation from the passband to the stopband. In a physical filter, there will be some gap between the passband and the stopband. This gap is called the transition band. The width of the gap is

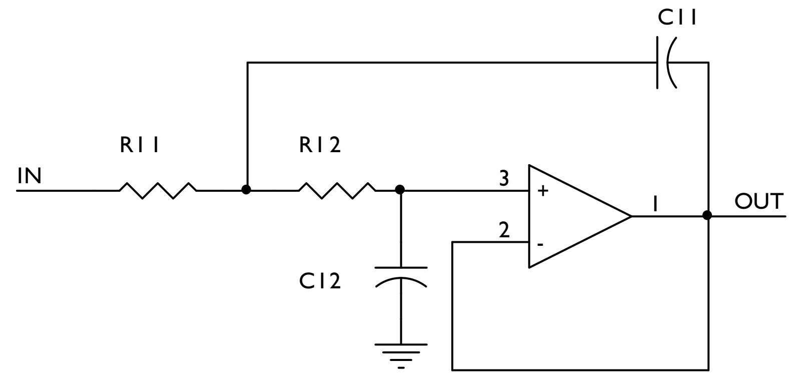

Figure 3. This circuit can be used to implement Chebyshev, Butterworth, and Bessel analog filters by simply changing the values of the components.

referred to as the transition bandwidth. As the transition bandwidth gets smaller, the filter's frequency response improves accordingly. Transition bandwidth is inversely proportional to the number of poles in the filter.

Figure 5 shows a filter design that has a passband of 1 kHz and a stopband of 4 kHz with a stopband attenuation of -30 dB. Note that the ideal passband cutoff of 1 kHz doesn't really occur until sometime beyond 2 kHz. You can safely assume that this filter design won't require many components and won't take up much space in a microcontroller's memory area.

Judging from the transition bandwidth, you can also assume that this filter will not be very responsive to small changes in frequency. By adding some poles and zeros and specifying a lower stopband frequency, Figure 6 shows that the width of the transition band narrows and sharpens the roll-off at the start of the transition band. This filter design requires quite a bit more firmware and hardware than the filter design depicted in Figure 5 and is much more responsive to small changes in frequency.

Filter Comparisons

The Chebyshev filter has a sharper roll-off than the Butterworth and Bessel filter models. The Chebyshev filter uses ripple in the passband to achieve the sharp roll-off characteristic. The more ripple allowed in the Chebyshev passband, the sharper the roll-off that can be obtained from the filter. Although the Chebyshev filter does a great job at discriminating frequencies, it has a relatively poor step response when compared to a Bessel filter.

Poor step response means that the Chebyshev does a poor job of filtering signals with sharply rising and falling edges. The Chebyshev filter will overshoot and undershoot on the rising and falling edges of the input signal. You're already familiar with this phenomenon: It's called ringing. The Chebyshev filter is composed of poles only. A Filter Lab-generated Chebyshev frequency response plot is shown in Figure 7.

Ringing on the rising and falling signal edges can be eliminated by employing a Bessel filter model. Unlike the Chebyshev filter, the Bessel filter does not contain any ripple in the passband or the stopband. However, the Bessel filter's roll-off rate of attenuation in the transition band is the worst of the three filter models. The Bessel filter shines with sharp-edged signals as it introduces very little overshoot or ringing and preserves the majority of the sharpness of the filtered signal's edges. Thus, the Bessel filter model is a good choice for filtering time domain signals. The Bessel filter model in Figure 8 contains no zeros and is an all poll filter.

As you can see in Figure 9, a Butterworth filter is maximally flat in the magnitude response in the filter's passband with no ringing in the stopband. Like the Chebyshev, the

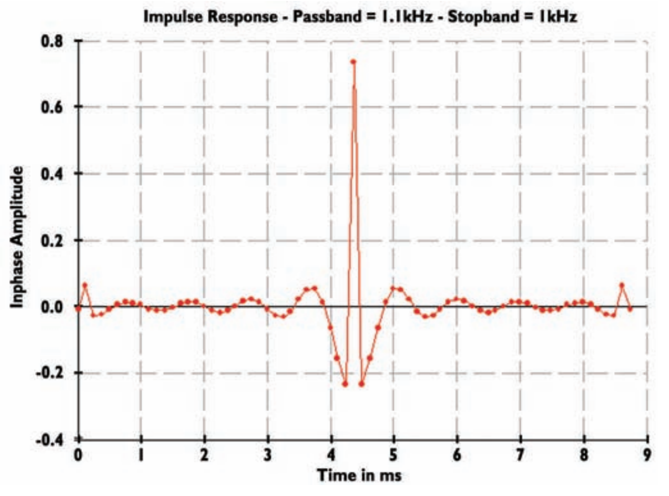

Figure 4. This says it all. The top sine wave's amplitude decreased as I increased the input frequency towards the digital filter's 1 kHz bandstop value.

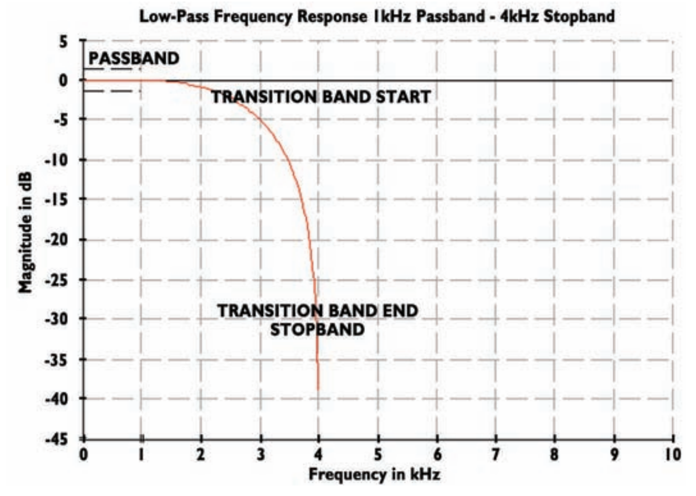

Figure 5. A relatively slow change in attenuation over the transition band translates into a filter that doesn't require as many poles and zeros and, thus, isn't as responsive as the filter shown in Figure 6.

Butterworth filter is good for separating bands of frequencies. The Butterworth filter stands in the middle as far as transition band attenuation is concerned. Butterworth's filter transition band attenuation is better than the Bessel's, but worse than the Chebyshev's. The step response of a Butterworth filter is slightly better than the Chebyshev step response. There are no zeros in the transfer function of a Butterworth filter. Thus, like the Chebyshev and Bessel filter models, the Butterworth filter is an all pole filter.

Butterworth and Chebyshev filter models work best in the frequency domain, while the Bessel is a better time domain signal filter. It's easy to determine if you're looking

Surplus Sales of Nebraska

Weston 1751 Series Meters

(MTR) 1751-62
0 - 100% Cam Dwell
0 - 200 uadc full scale.
Needle reversed.

(MTR) 1751-63
Vacuum Pressure
500 - 0 - 500μ amps
DC full scale.

(MTR) 1751-65
0 - 10 / 0 - 50 RPM
in 100's. 1 madc full scale.

(MTR) 1751-67
0 - 10 / 0 - 50 amps DC
1 madc full scale.

(MTR) 1751-69
0 - 10 / 0 - 20 vdc
1 madc full scale.

(MTR) 1751-91
0 - 50 kvdc.
200 μa full scale.
Req. bleeder resistor.

$22 each - 5 or more for $20 each - Mix & Match
**** Screen Your Own Meters!! Blank White Meter Faces available!! $2 each ****

(PS) 10656X
Yes, we still have a good supply of this new, wonderful Deltron triple voltage open frame linear supply. So versatile. Trim the 15 vdc fundamental supplies on the circuit board. 12-16v or remote mount a 10 turn 5k Ohm pot and turn it into a 7-30v regulated lab supply. It's simple to do. Instructions included. Series or parallel the two supplies for a combined 7-60v @ 2.5-5 amps. Board trimmable current limiting too. New, boxed, from Collins surplus. 10 pounds each. 3-1/4" x 5" x 11" long.
$35 each - $32 (3+)

Please visit our website with over 2,000 pages and 10,000 images • www.surplussales.com

HI Manuals: 1,000s of radio, military and test equipment manuals on hand!!
Fans & Blowers: Over 100,000 In Stock! Muffin - Squirrel - Spiral
Transformers: Sealed, Open Frame, Audio, Switching, Pulse, High Voltage
Resistors: Wire Wound, Carbon Comp, Metal Film, Surface Mount
Split Beads: For are all of your interference problems.
Ceramic Transmitting Capacitors: Of All Sizes: Doorknobs-Feedthru-Water Cooled
Metal Halide High Intensity Lamp Ballasts
Kapton, Fiberglass and Mylar Tapes
Vacuum Tubes: Over 1,000,000 vacuum tubes in stock!!
Enclosures: Rack Cabinets, Builder Boxes, Shipping Containers
Antique Galvanometers: by JH Bunnell
Heatsinks: All Sizes and Shapes. Large Quantities for Manufacturers
Western Union Self-Winding Clocks
Toroids: Powdered Iron, Ferrite, Rods, Pot and E Cores
Variable Capacitors: Air - Mica - Vacuum

1502 Jones Street, Omaha, NE 68102 • Fax: 402-346-2939 • e-mail: grinnell @ surplussales.com • Visa, Mastercard, American Express or Discover
Call or e-mail for shipping and total charges. All SPECIALS in this Ad only good for 30 day advertising cycle. No exceptions please.
Visit our website @
www.surplussales.com
800-244-4567 • 402-346-4750

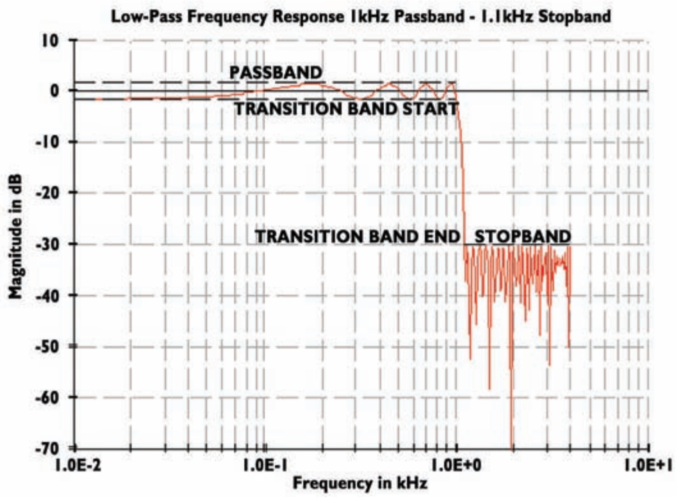

Figure 6. Due to the tighter transition bandwidth, the frequency attenuation in the transition band is much sharper, which equals more poles and zeros and a more refined filter.

at a time or frequency domain filter plot. If the X axis is measured in units of time, you're in the time domain and the information is carried as a function of time. If the X axis is measured in units of frequency, you're operating in the frequency domain, in which the signal's information is carried as a function of frequency. Don't let the logarithmic scales throw you. The information contained in a log plot is the same information that would exist in a unit plot of the same data. Log scales are used when standard unit scales can't dynamically give your eyes the full impact of the plot.

You're all set on basic filter theory as now you know that, to design an analog low-pass filter, you will need to specify the passband frequency, the stopband frequency, and the stopband attenuation. The same is true for a digital low-pass filter design. You also know that, once you design a low-pass filter, you can derive any other filter type from your low-pass filter kernel. You've also been introduced to two applications: ScopeFIR and Filter Lab, which help take the tedious math out of designing filters. In the text that follows, we will design and build some analog and digital filters using ScopeFIR and Filter Lab.

The Digital Filter Hardware

Digital filters have many advantages over analog filters. To change the characteristics of a digital filter, all you have to do is change some code versus altering physical components in an analog filter. Another advantage of using a digital filter is that there are no physical components that can drift in value and degrade the performance of your filter. Even with those extras, a good digital filter is incomplete without an analog filter counterpart. This sidekick analog filter is known as an anti-aliasing filter.

Our digital filter input is gathered by the analog-to-digital converter module in a PIC18F452. The maximum frequency that our PIC-based digital filter can resolve is set to one half of the sampling frequency, which we will set to 8 kHz. If we attempt to sample a signal that has a frequency component above one half of our sampling rate, we will record an aliased signal, which will not represent the true input signal.

Aliasing occurs when signal components above one half of the sampling rate are folded back and appear as lower frequencies in the digital output. It's the anti-aliasing filter's job to block any signals above one half of the sampling frequency and pass all other signals below one half of the sampling frequency to the PIC18F452's analog-to-digital converter unchecked. The one half of the sampling frequency value is known as the Nyquist frequency or Nyquist rate.

If you check out the schematic (Figure 13), you'll see that I've devised a digital filter circuit using a PIC18F452 that includes a Microchip MCP604 quad opamp, a couple of Microchip MCP42100 dual digital potentiometers, a +5 V DC regulated power supply, a Sipex SP233ACP-based serial port, a Microchip ICSP programming port, and a 40 MHz microcontroller clock. My prototype digital filter board can be seen in Figure 11.

A typical digital filter configuration consists of an anti-aliasing filter feeding an analog-to-digital converter with the output of the digital filter flowing into a digital-to-analog converter. A pair of opamps in

Figure 7. By using ripple in the passband, the Chebyshev sacrifices response in the time domain to optimize response in the frequency domain.

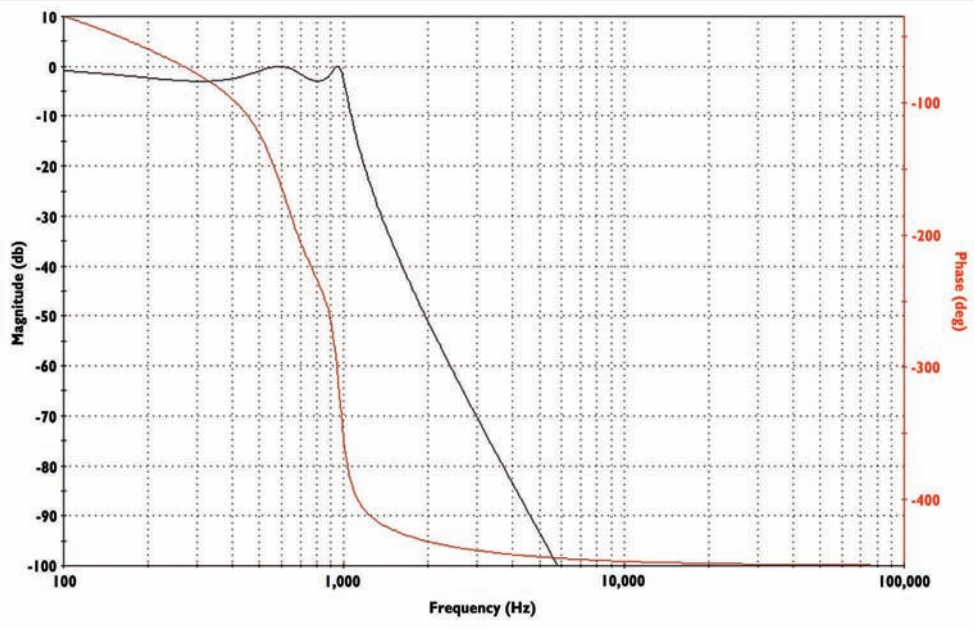

the MCP604 handles the anti-aliasing and digital-to-analog converter duties with both opamps being supported by the full complement of MCP42100 100K Ω digital potentiometers. Along with a quad of capacitors, the MCP604 and MCP42100 form two Sallen-Key filter configurations that are dynamically controlled via the digital potentiometers, which are adjusted using a personal computer-resident control program. Since every digital pot has a different end-to-end (PA-to-PB) resistance, the digital filter control panel has dials to set the actual digital potentiometer PA-to-PB resistance so that each click of the potentiometer's virtual dial displays the correct resistance in the digital filter control panel's virtual LED displays.

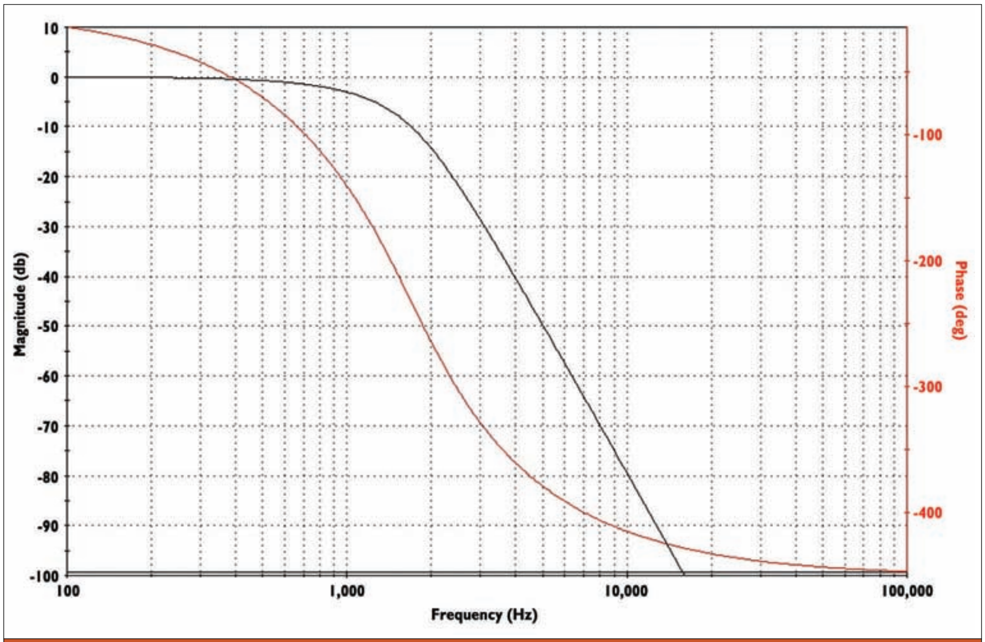

Figure 8. The Bessel filter model produces a constant time delay with respect to frequency. Note the symmetrical phase plot. Another feature of the Bessel filter is its ability to deliver linear phase performance over a wide frequency range. That's why the Bessel filter has very good pulse (step) response.

Microchip's Filter Lab program is used to determine the Sallen-Key analog filter resistances for a particular filter type (Chebyshev, Bessel, or Butterworth) and cut-off frequency and the computed resistances are transferred to the digital potentiometers using the digital filter control panel's virtual dials and a serial connection between the personal computer and the digital filter electronics.

There is no practical way to adjust the capacitors in the analog filter circuits. So, fixed capacitor values were chosen that provide a wide range of analog filter bandwidth when combined with the 100K Ω digital potentiometers. The digital filter control panel also allows remote control of the PIC18F452's PWM (Pulse Width Modulation) module. The digital filter control panel — along with the opamps, fixed capacitors, and digital potentiometers — allows us to create any of the three basic filter types (Chebyshev, Bessel, or Butterworth) and specify the analog filter response without having to swap physical components. To add to that flexibility, the opamp is not committed to a printed circuit board land pattern. This allows the user to configure the quad of opamps in any way desired.

There's nothing unusual about the circuitry surrounding the PIC18F452. A standard LM340S +5 V DC regulated power supply circuit is included onboard the digital filter printed circuit board. The LED I used as the power indicator has an internal current limiting resistor and sits directly across the +5 V DC output of the voltage regulator.

To establish a communications session between the digital filter board and the personal computer, the USART receive and transmit pins of the PIC18F452 are connected

Figure 9. It takes a higher order Bessel filter to be as responsive as a typical Butterworth filter. However, the trade-off is worth the extra firmware in a digital filter and the extra hardware in ananalog filter design.

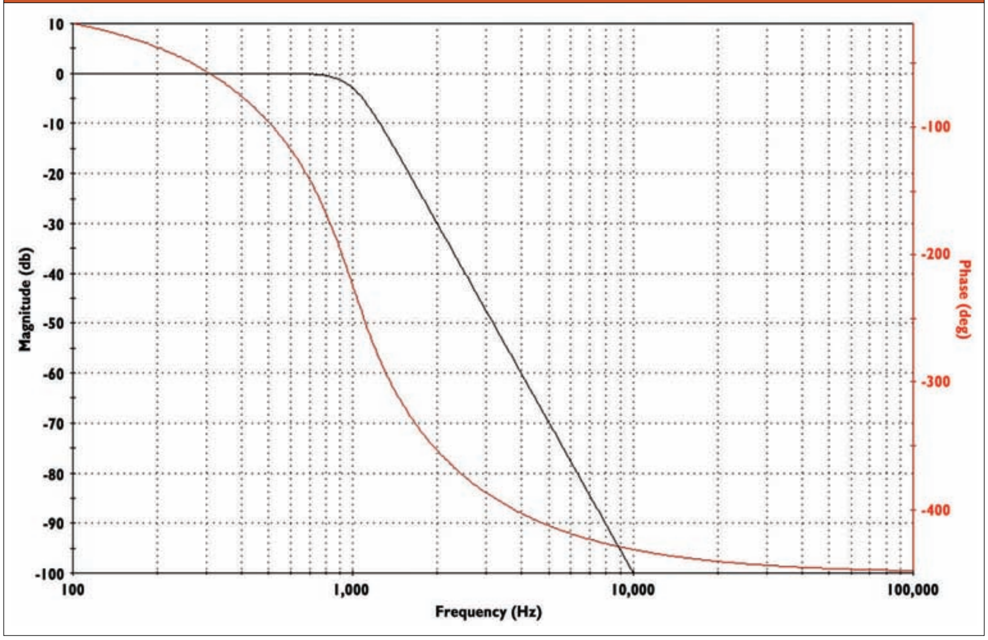

in a standard way to the Sipex SP233ACP RS-232 converter, which, in turn, interfaces to the outside world via a standard nine-pin shell connector as a DCE device. By making the digital filter board's RS-232 port DCE, the need for an RS-232 crossover cable is eliminated.

The SPI module of the PIC18F452's MSSP (Master Synchronous Serial Port) drives the digital potentiometers and a 40 MHz crystal oscillator provides the clocking for 100 nS instruction cycles within the PIC18F452. A standard Microchip ICSP port is also a part of the digital filter board and allows the use of the MPLAB ICD2 hockey puck for programming and debugging.

You can easily assemble the digital filter electronics using point-to-point techniques. If you go the point-to-point route, you can substitute a DIP version of the Sipex SP233ACP for the SMT version on the digital filter printed circuit board. For those of you that prefer a printed circuit board and a full complement of components, I've made arrangements with the folks at EDTP Electronics to provide a full kit of parts — which they call the Digital Filter Development Kit. The digital control panel application and the digital filter PIC18F452 firmware are free downloads and you can get them from the *Nuts & Volts* website at **www.nutsvolts.com** or the EDTP Electronics website at **www.edtp.com**

Note 1

Enter as many taps as you can to make your filter the best it can be. However, remember that, with an 8 kHz sampling rate, you have to process all of those taps in less than 125 mS.

Coding and Using the Digital Filter

The firmware for the digital filter is written using a combination of PIC C and PIC assembler. The PIC assembler code is used for speed. Sampling at 8 kHz means that we have 125 µS to perform the digital filter work before a new sample is taken. We want to cram every possible digital filter instruction we can between the taking of the samples. Therefore, assembler is used for coding of the math and digital filter routines.

Using PIC C allows the easy allocation of memory elements to hold the digital filter coefficients and data. The C constructs also eliminate having to code all of the house-

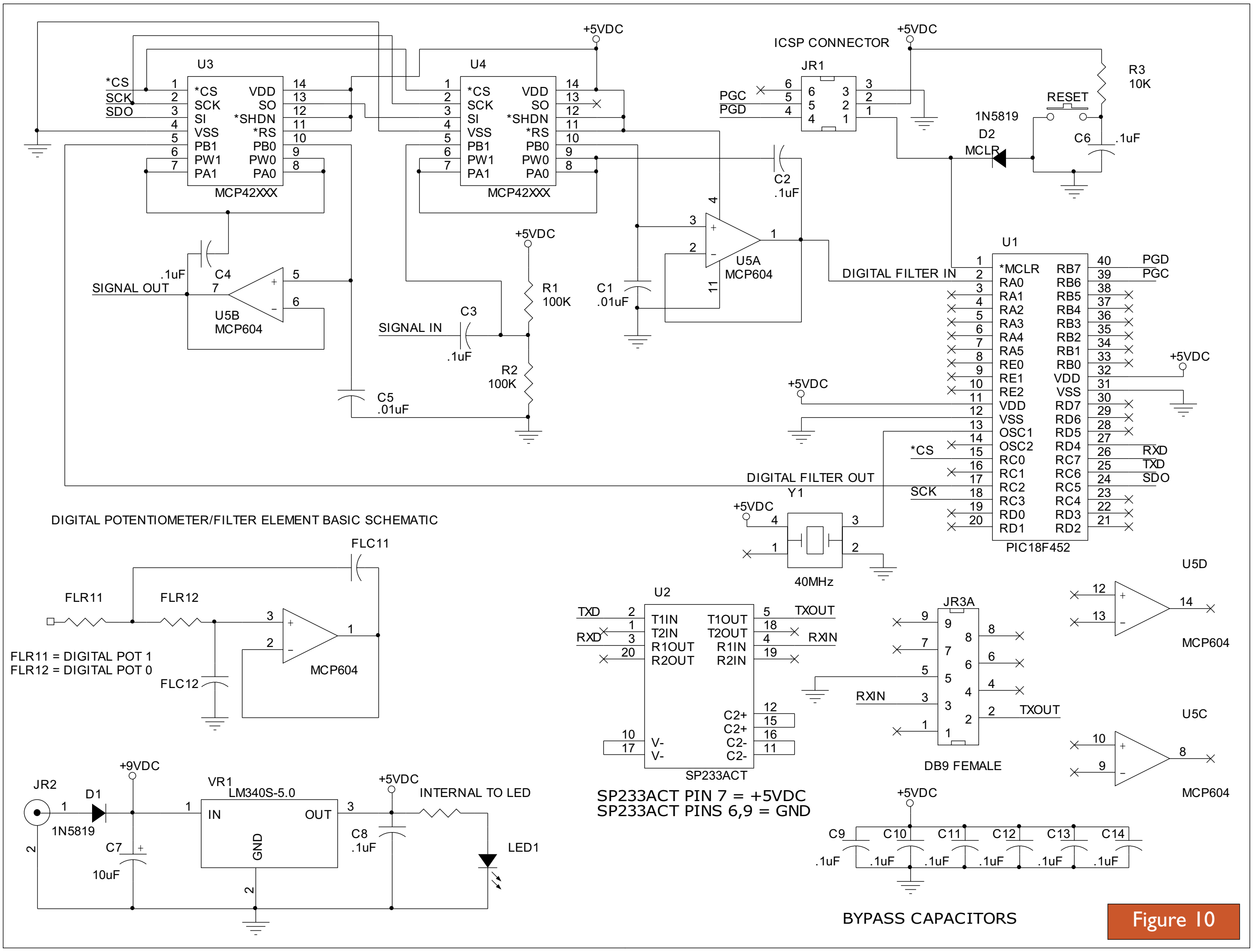

Figure 10

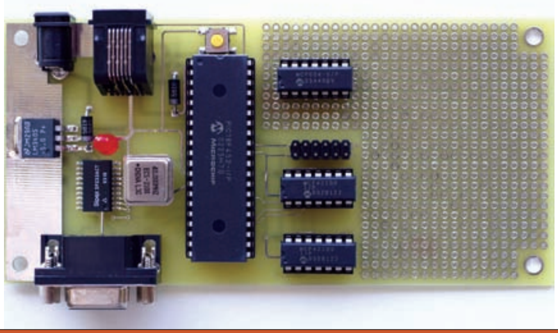

Figure 11. If you're wondering where the analog filter resistors and caps are, I breadboarded them in with 0805 SMT components on the bottom side of the board.

keeping stuff when making calls to subroutines and functions.

Arrays, constants, and variables that are defined in C can be accessed by their C-assigned names in the assembler routines. Thus, all of the PIC18F452 internal peripheral setup, the allocation of arrays and constants, and the RS-232 interrupt handler are written using C. The Custom Computer Services PIC C Compiler, in conjunction with Microchip's MPLAB IDE, is used to compile the assemble RC code combination. I used a Microchip MPLAB ICD 2 to program and debug the digital filter's PIC18F452.

The PIC18F452's Timer2 and Capture/Compare Module2's trigger special event mode are programmed to automatically kick off an analog-to-digital conversion every 125 µS. That's where the 8 kHz (1/125 µS) digital filter sample time number comes from. To avoid having to add a negative voltage reference for the PIC's analog-to-digital converter, the anti-aliasing filter's input is capacitively coupled and a +2.5 volt offset is added to the incoming signal by the voltage divider produced by R1 and R2. Doing this sets our analog-to-digital converter zero point in the center of the PIC18F452's 10-bit analog-to-digital converter range and allows the input signal to swing ±2.5 volts, which equates to 0 to 5 volts at the analog-to-digital converter input.

In order to keep input and output signals in balance, that means our digital filter output zero point must also be set for 2.5 volts. This is easily done by simply using the full 10-bit resolution of the PIC18F452's PWM module. A value of 0 x 1 FF is the offset zero point (+2.5 volts) of our analog-to-digital converter and the 50% duty cycle mark (+2.5 volts) for the PWM module. The digital filter output modulates a 39.06 kHz PWM signal that is produced by the PIC18F452's PWM module. The PIC's PWM module and the Sallen-Key filter that it is feeding form a digital-to-analog converter.

Put a voltmeter or scope probe on the output of this PWM-fed filter and you'll see +2.5 volts when the PWM duty cycle is at 50%. The ON/OFF switch inside the digital control panel's Pulse Width Modulation Manual Control box kills the automatic analog-to-digital converter process and turns off the digital filter code inside the PIC18F452. This allows the direct control of the PIC18F452's PWM module. To see how the PWM duty cycle relates to the voltage produced by the output filter, attach a voltmeter to the output of the SIGNAL OUT pin, switch on the manual control, and turn the virtual DUTY CYCLE knob. You'll see the voltage on the SIGNAL OUT pin rise and fall with the increase and decrease in the PWM duty cycle. Be sure to turn the manual PWM controls off when you're running a digital filter kernel.

Speaking of digital filter kernels, let's generate one for a low-pass FIR (Finite Impulse Response) filter using the ScopeFIR application. ScopeFIR doesn't use any of the three filter models you've been introduced to. We'll use one of those models for the analog anti-aliasing and analog digital-to-analog filter. Instead, ScopeFIR uses the Parks-McClellan or Optimal Equiripple method to generate an optimized linear-phase FIR filter. Many of the free FIR filter coefficient generators that are available via the Internet use the Parks-McClellan algorithm (ScopeFIR is not free if you want the bells and whistles). Figure 12 shows a ScopeFIR session that has generated a filter kernel for a low-pass filter with a 500 Hz passband frequency and a 1 kHz stopband frequency with a -30 dB attenuation factor.

If you investigate the filter's impulse response plot points, you'll note that they are all less than 1. To make these coefficient numbers easier to handle with our assembly code math routines, we multiply — or scale — them by 32,768 or 215. If you're wondering about the negative coefficient values, they are the 16-bit hex numbers that have their most significant bit set to 1. This is called 1.15 format. That's fancy talk for 1 sign bit and 15 data bits that represent a fractional number. I instructed ScopeFIR to do the 32,768 multiplication automatically after the filter kernel was built. Once the 16-bit coefficients are determined, they

Figure 12. This is a shot of a ScopeFIR session. Everything you'll need to implement a FIR digital filter is here, including the scaled coefficients you'll need for your digital filter kernel.

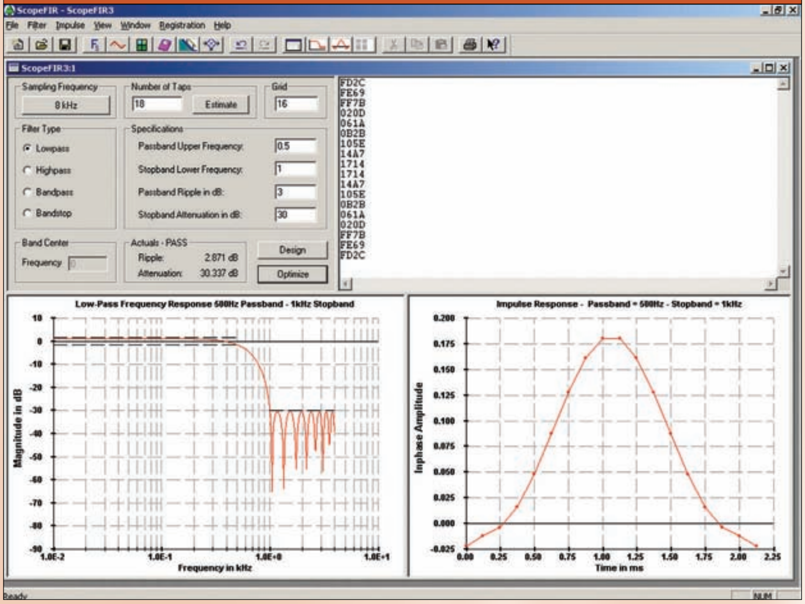

Sampling Frequency: 8 kHz
Number of Taps: 18
Grid: 16
Filter Type: ● Lowpass ○ Highpass ○ Bandpass ○ Bandstop
Specifications
Passband Upper Frequency: 0.5
Stopband Lower Frequency: 1
Passband Ripple in dB: 3
Stopband Attenuation in dB: 30
Band Center Frequency: 0
Actuals - PASS
Ripple: 2.871 dB
Attenuation: 30.337 dB

```
FD2C
FE69
FF7B
020D
061A
0B2B
105E
14A7
1714
1714
14A7
105E
0B2B
061A
020D
FF7B
FE69
FD2C
```

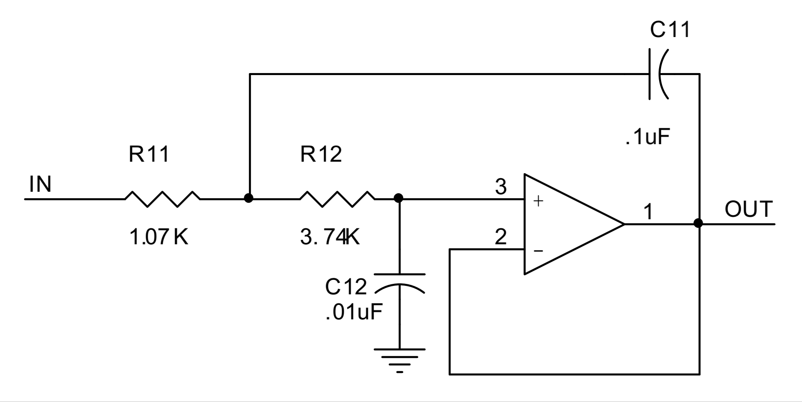

Figure 13. These values represent a Chebyshev low-pass filter with a 3 kHz bandpass and 13 kHz stopband. The stopband attenuation is set for -30 dB and the pass bandripple is set for 3 dB.

are included as constants in the digital filter firmware; more details on determining these are shown in Note 1.

Okay. Now that we have a kernel and some coefficients, we can apply them to the sum of products algorithm that form the heart of a FIR digital filter. The sum of products code implements a series of multiply and accumulate operations that follow the formula:

y[n] = a*x[n] + a-1*x[n-1]+ a-2*x[n-2]+... a-j*x[n-j] where:
y[n] = output signal
a = first coefficient
x[n] = current input signal point
a-1 = next coefficient
x[n-1] = next input signal point
until the last signal point and coefficient a-j*x[n-j]

Each multiplication operation between the additions corresponds to a tap (coefficient) of the digital filter, which corresponds to a point in the filter kernel. The sum of products process plays the digital filter's coefficients (filter kernel) against the incoming signal. This process is called convolution. Ultimately, every incoming signal sample is convolved with every coefficient yielding a string of digitally filtered signal points.

The digitally filtered signal points are numbers that represent voltages. The digitally filtered signal points are scaled back (divided by 32,768 because we multiplied them by 32,768 earlier in the process) and applied to the PIC18F452's PWM control registers and modulate the PWM accordingly. The output analog filter is configured to eliminate the 39.06 kHz PWM signal and only allow the filtered output to flow through.

So far, we've generated a filter kernel and entered the coefficients into the PIC code. Before we can process a signal through our digital filter, we must calibrate the digital potentiometers in the digital control panel and use Filter Lab to design our anti-aliasing and PWM output analog filters.

I removed the opamp IC from the digital filter circuit and powered up the digital filter board. The Microchip digital potentiometers automatically set themselves to midpoint on powerup. I read 55 KΩ across U3 and 54.3 KΩ across U4. I chose to use a Chebyshev for both of the analog filters and set the passbands to 3 kHz with stopbands of 13 kHz with -30 dB of stopband attenuation. Since this is a Chebyshev filter, I also specified a passband ripple figure of 3 dB. Filter Lab computed the values for the Sallen-Key low-pass filters, as shown in Figure 13. I dialed all of the parameters into the digital filter control panel, as shown in Figure 14 and clicked the SET FILTERS button.

On Your Own

Wow! Figure 15 shows the signal at the output of the anti-aliasing filter (bottom sine wave) and the resultant digitally filtered signal (top sine wave). The closer I get to the 1 kHz bandstop frequency, the smaller the top sine wave gets. We've just pulled off a digital filter without having to apply any complex math. I now pass the digital filter tools over to you. **NV**

Figure 14. With the help of Microchip's Filter Lab and ScopeFIR, the digital filter control panel provides a means of quickly evaluating analog and digital filters. Note that I dialed in as close asthe potentiometers would allow.

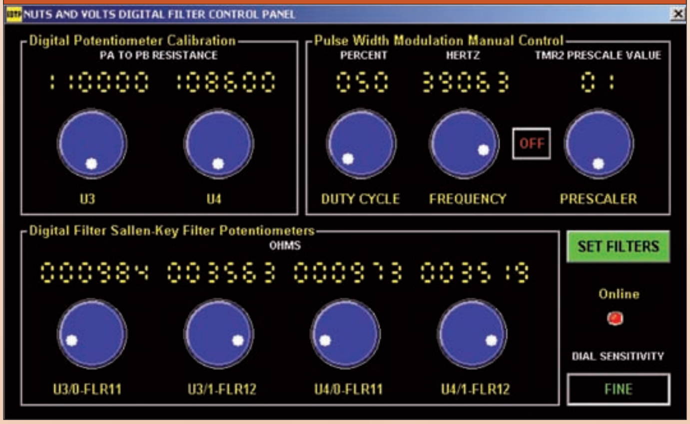
NUTS AND VOLTS DIGITAL FILTER CONTROL PANEL

Digital Potentiometer Calibration
PA TO PB RESISTANCE
U3: 110000
U4: 108600

Pulse Width Modulation Manual Control
DUTY CYCLE (PERCENT): 050
FREQUENCY (HERTZ): 39063
PRESCALER (TMR2 PRESCALE VALUE): 01
OFF

Digital Filter Sallen-Key Filter Potentiometers
OHMS
U3/0-FLR11: 000984
U3/1-FLR12: 003563
U4/0-FLR11: 000973
U4/1-FLR12: 003519

Online
DIAL SENSITIVITY: FINE

Figure 15. This photo says it all. The top sine wave's amplitude decreased as I increased the input frequency towards the digital filter's 1 kHz bandstop value.

CLASSIFIEDS

CLASSIFIED ADVERTISING

$50.00 Per Inch — No extra charge for color *(Limited time offer).* Classified ads must be paid in full prior to the closing date. Visa/MC/Amex accepted. Payment for ads received after the closing date will cause the ad to be placed in the following issue, at our discretion. Minimum charge is one inch with half-inch increments.

No proofs will be sent. Ads to be typeset by *Nuts & Volts* must be received by the closing date. Supplied ads must be received by the artwork due date.

Call the office at 909-371-8497 or Email classads@nutsvolts.com for closing dates, available sizes, and special prepay discount offers.

Components

FREE 120 Pg CATALOG

Electronic components, kits, test equipment, tools, and supplies for hams, hobbyists, and businesses. Many hard-to-find items like variable capacitors, vernier dials, coil forms, magnet wire, and toroids.
Ocean State Electronics
www.oselectronics.com

RF Transistors, Door Knob Caps, Power Supplies, Tubes, Coax, Teflon Wire

2SC2879 2SC2290 3-500Z 4CX250B

See our website for other products
www.westgateparts.com
Westgate 1-800-213-4563

Plans/Kits/ Schematics

MAGNETIC LEVITATION KIT

Suspend small objects in space using magnetism!
Parts: $49.99
Assm. + tested w/power supply $64.99 + S/H
ORDER ON LINE:
www.arttec.net/Levitation/Kit.html

Robotics

canbotics.com
Autonomous robots
Panning proximity sensors
Motherboards • Motor Drivers

- Cost Effective
- Laser Cut Plastic
- Cutting, Engraving
- Paint Filled Engraving
- Robotic Parts
- Front Panels
- Decorative Plastics

Vector Fab LLC
www.vector-fab.com

Discover the Future!
Discover ***Muscle Wires*** Motorless Motion
They actually shorten in length *when powered and lift thousands of times their own weight!*
• Strong • Silent • Low Voltage • 11 sizes •
Project Book & Deluxe Kit (#3-168) just $59.95
Muscle-Wires.com • Mondo-tronics, Inc.
Order Toll Free 800-374-5764

Z8 Encore MCU Modules

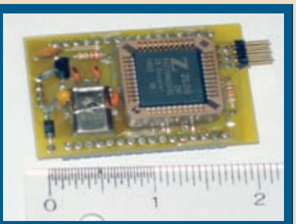

$69 *includes* C Compiler!

- "Stamp-Like" C Functions- easy programming.
- 2 Hardware UARTS w/FIFOs, PWM, PCI and more.
- 30 I/O Lines with interrupts + 20mA source/sink.

www.MCUResearch.com

Audio/Video

www.matco.com
SCOPECAM Telescopic Video System

- Built-in hi-res color camera
- Built-in 2.5" TFT color LCD monitor
- Built-in video output port for recording or display
- Day/night application switchable
- Powered by rechargeable Lithium battery
- 1" tube rings, slide rail, AC charger, DC charger, assembly tool and custom molded case included
- scope & tripod not included

$499/set
(800)719-9605 sales@matco.com

www.matco.com
4 Channel PC Based Digital Video Capture Card

DVRC-XP4
Special Price $149
30 fps, 640 x 480, RCA Video Input, 1 Channel Audio Input
(800)719-9605 sales@matco.com

www.matco.com
5VDC CCD Color Board Camera

- Super high performance
- Powered by 5 VDC
- SONY 1/4" CCD Sensor
- 400 TV Lines
- 0.01Lux
- 3.6 mm lens included
- 1"W x 1.5"H x 3/4"D
- OEM versions available

$99/ea
(800)719-9605 sales@matco.com

Computer Hardware Wanted

DEC EQUIPMENT WANTED!!!
Digital Equipment Corp. and compatibles.
Buy - Sell - Trade
CALL KEYWAYS 937-847-2300
or **email buyer@keyways.com**

PIC PROJECTS
FREE CATALOG
ELECTRONICS HOBBY SHOP
electronicshobbyshop@cpol.net

ROBOTIC CONTROLLERS
Robot Bases. PIC, OOPic, Stamp and multi-servo controllers. Also, Pocket TestBench. Chips, kits, and assembled.
www.oricomtech.com

CLASSIFIED ADS WORK!!
CALL TODAY
(909) 371-8497

Join our on-line electronics forums!
www.nutsvolts.com

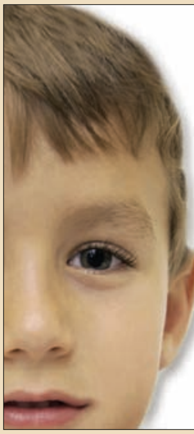

Brandon built his own Mars Rover out of LEGO bricks.

His mom gave him a subscription to *SERVO* so he could take the next step.

12 issues for $24.95
Call 800-783-4624
or go online:
www.servomagazine.com

CLASSIFIEDS

Security

www.matco.com

Color Mini Pinhole Camera

BX-123LC/PC $69/ea (with Audio)

SONY 1/3" CCD,
380 TVL, 0.1 Lux/f2.0,
3.6 mm Lens
Size: 0.9" X 0.9" X 0.5"

Color Lens/Pinhole Box Camera

BX-200LC/BX-200PC
SONY 1/3" CCD,
380 TVL,
0.5 Lux/f2.0,
3.6 mm Lens,

$109/ea (with Audio)

Super Hi-Res Color Lens Box Camera

BX-130LC-HR
SONY 1/3" CCD,
470 TVL,
0.4 Lux/f2.0,
3.6 mm Lens

$189/ea

(800)719-9605 sales@matco.com

consumertronics.net

Hi-Tech Survival Offers!

Electronics, security, energy, computers, Net, phones, medical, legal, financial, weird. **Cat.$1**

www.matco.com

Miniature CMOS Camera

CML-100/CMP-101
1/4" CMOS, 380 TVL,
3 Lux/f2.0, 3.6/5.5mm Lens
B/W: $29/ea Color: $39/ea

Weather Proof Infrared Illuminator CCD Camera

B/W: AX-808 $139/ea
1/3" CCD Sensor, Built-in 11 IR LEDs, 380 TVL, 0Lux/F2.0, AI, BLC, 5' or 60' Cable Available

Color: AX-808C $169/ea
1/4" CCD Sensor, Built-in 11 IR LEDs, 330 TVL, 0Lux/F2.0, AI, BLC, 5' or 60' Cable Available

(800)719-9605 sales@matco.com

Amateur Radio

www.4atv.com

$129/ea

**2.4 GHz Power Amplifier,
Power Supply included,
10-40 mW Input, 1 W Output,
Size: Approx 2" X 2" X 3/4"**

ZAP CHECKER MODEL 270

WIRELESS INSTALLATION METER

- Detects & locates RFI
- Discovers hot & cold spots
- Measures Baseline RF levels
- Identifies hacker-site locations
- Optimize network hub placement

SENSITIVITY - VERY HIGH
Measures to ambient, baseline RF levels

BROADBAND - 10 MHz - 4.5 GHz
Ideal for 2.4, 1.8, 1.2, 0.9, 0.45 GHz installations

3 DETECTION MODES
LINEAR - For detection from a distance
LOG - To view baseline to high signal levels
MID - To sort through multiple signal sources

METER+LED DISPLAYS, VIBRATE MODE
Distant & nighttime, hands-free detection

SELECTABLE ANTENNA OPTIONS

- **SMA COAXIAL INPUT** - For antenna pointing & positioning and for measuring Xmtr/Rcvr signal strengths
- **2 FIXED INTERNAL ANTENNAS** - No adjustments needed

ALAN BROADBAND CO.
93 ARCH ST., REDWOOD CITY, CA 94062
(650) 369-9627 (888) 369-9627
FAX: (650) 369-3788

$329 with directional 1.8 - 6.4 GHz Log Periodic antenna
$269 without antenna
(+ $7 S&H. CA Residents add 8.25% tax)

WWW.ZAPCHECKER.COM

Antique Electronics

WANTED:

FOR HISTORICAL MUSEUM
pre-1980 microcomputers,
magazines, and sales literature.
Floyd, VA 24091-0341.
540-763-3311 • 540-745-2322

Computer Hardware

NEW!

CAN-4-USB
MCP2515
$219.00 USD Qty 1
Discounts at Qty 10

- USB to CAN interface
- Now Faster! 1Mbps thruput
- All PC source code included
- Test software with source code
- Over 8 years of CAN experience designing and selling interfaces

Zanthic Technologies Inc.
403-526-8318
www.zanthic.com

Military Surplus

Hand Operated Generator

Telefunken GN-58-A

Specifications:

6.3 Volt	2.45 Amp
1.4 Volt	0.45 Amp
425 Volt	0.115 Amp
105 Volt	0032 Amp

New Surplus includes Canvas Bag and Spare Brush Set

US $49.99 + Shipping

Call (479) 521-0056
www.SwissArmyVehicles.com

Connectors Wire/Cable

The RF Connection
213 N. Frederick Ave., Ste. 11NV
Gaithersburg, MD USA 20877
http://www.therfc.com/

Complete Selection of MIL-Spec Coax, RF Connectors and Relays

UG-21B/U N Male for RG-213/214 .$5.00
UG-21D/U N Male for RG-213/214 .$3.25
N Connectors for 9913/Flexi4XL/9096
UG-21B/9913 .....$6.00 / Pins Only......$1.50
UG-21D/9913 ..$4.00 / Extra Gasket.$0.75
Amphenol 83-1SP-1050 PL-259 $0.90
UG-176/U Reducer RG-59/8X, $0.25
or 5/$1.00
UG-175/U Reducer RG-58/58A, $0.25
or 5/$1.00
Silver Teflon PL-259/Gold Pin, $1.00
or 10/$9.00

MIL-Spec Coax Available (Teflon, PVC IIA)
New Product: Belden 9913F, 9913 with High Density PE Foam dielectric, stranded center cond. and Duobond III Jacket $0.80/ft or $76.00/100ft
Also New: 9092, RG8X with Type II Jacket.
Intro Price $23.00/100ft

Call for Specials of the Month

Full Line of Audio Connectors for Icom, Kenwood, and Yaesu

8 Pin Mike Female	$2.50
8 Pin Mike Male Panel	$2.50
13 Pin DIN for Kenwood	$2.75
8 Pin DIN for Icom	$1.00
8 Pin DIN for Kenwood	$1.50

Prices Do Not Include Shipping

Orders	**800-783-2666**
Info	**301-840-5477**
FAX	**301-869-3680**

ANAHEIM WIRE PRODUCTS

Manufacturer and distributor of electrical and electronic wire and cable since 1973.

ITEMS AVAILABLE FROM OUR STOCK:
Hook up wire, Shrink tubing,
Cable ties, Connectors.
Wire cut & strip to specs.
If interested, please call
1-800-626-7540
FAX: 714-563-8309
See us on the Internet:
www.anaheimwire.com or
email: info@anaheimwire.com
Visa/MC/Amex.

Mfg. Custom Data/Computer Cables
Network, Coaxial, Fiber Optics
Wholesale & Retail
R & D Electronic Supply
714-979-1834
3301 S. Harbor #108, Santa Ana, CA
Visit us at www.rdelectronic.com

Printer Supplies

Hard-to-find Printer Ribbons

**INKJET REFILLS
INKJET CARTRIDGES
AT DISCOUNT PRICES**

Write for price list or check out our web page.

H.T. Orr - Computer Supplies
249 Juanita Way
Placentia, CA 92870-2216

TOLL FREE 1-800-377-2023
LOCAL 714-528-9822
FAX 714-993-6216
email: Htorr@aol.com
http://users.adelphia.net/~htorr

Miscellaneous Electronics For Sale

OVER 4,300 ITEMS IN STOCK

**Surplus & Refurbished
Electronic Equipment
Parts & Accessories**

Audio, Communication, Computer, Telephone, & Video Equipment. Repair Parts & Service Manuals.

SMC ELECTRONICS
www.smcelectronics.com

On Sale Now

Cordless Telephone Battery Packs
50 - 75% OFF RETAIL PRICES!

300 NEW IBM 700AVR Battery Backups
6 AVR Outlets, Software for Automatic Shutdown
$369 Sell: $60. Ink Jet Cartridge Filler
Sealed Lead Acid Batteries:
UPS • Emergency Lights • Toys

ISE 888-351-5550
www.isesurplus.com

RS485/422/232/TTL

ASC24T $45

- Converters
- Repeaters
- Fiber Optics
- Digital I/O
- Multidrop RS232
- Custom Units
- Auto TX Enable

Extensive Interface Product Line
RS232 "Extension Cords"
Up to 115.2 Kbps, 4000 ft. ++
Large Multidrop Networks.
Isolated Units. Smart Units
Remote Relay "Extension Cords"

Call the RS485 Wizards at
(513) 874-4796

RES R.E. Smith
www.rs485.com

www.nutsvolts.com

CLASSIFIEDS

Education

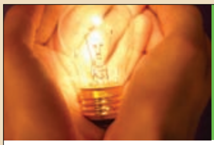

FEEL THE POWER
of knowing you are
ABOVE AVERAGE

ONLINE LEARNING

- For Computer Electronics, Radar, and Industrial (Journeyman Exams)
- Only $49.95 for a hard copy & 150 days of Online Learning

International Society of Certified Electronics Technicians
800/946-0201; www.iscet.org

CCS C Compiler
for PIC® Microcontrollers

Software Development Kits
Include full IDE Compiler and
In-Circuit Debugger/Programmer

Everything you need to get started in C--all in one box!

Embedded C Language Development Kit

Student Version only $149!
PCWH Full Version $499
PCW Full Version $424
Hardware only $99

Other Proto Board Options:
18F452 18F6720 18F8720 12F675

Also Available:
CAN Bus Development Kit
USB Development Kit
Embedded Internet Demo Kit

262-797-0455
www.ccsinfo.com/picc

Please Use
Code CJ3

PIC ® and PICmicro® are registered trademarks of Microchip Technologies Inc., in the USA and other countries.

Misc. Electronics Wanted

Wanted: Balancing machines & vibration analyzing equipment manufactured by the following: •Spectral Dynamics •Hofmann •Bentley Nevada •Schenck •IRD Mechanalysis •Gishott **Contact Mike Park at E.T. Balancing**, 12823 Athens Way, Los Angeles, CA 90061
310-538-9738
FAX: 310-538-8273

Affordable Robotics Training Courses in:

Basic Electronics
Digital Electronics
Relay Control
Servo Controllers
PLC Systems
Hydraulic Systems

From Basic to Advanced!

WWW.UCANDO-CORP.COM

1-800-678-6113

FREE SHIPPING!

UCANDO VCR Educational Products Co.
(Est. 1988)

Membrane Keyboards/Switches

CUSTOM MEMBRANE KEYBOARDS / SWITCHES

1 TO 2 WEEKS TURNAROUND
VERY COMPETITIVE PRICING
Ex.: (5) 4-switch keyboards for $395.00
Custom metal backplates, cases and assemblies
Electronic assemblies/graphic overlays

Picofab Inc.
Tel: (418) 622-5298
Toll free: 1-888-408-4780
Email: sales@picofab.net

Design/Engineering Services

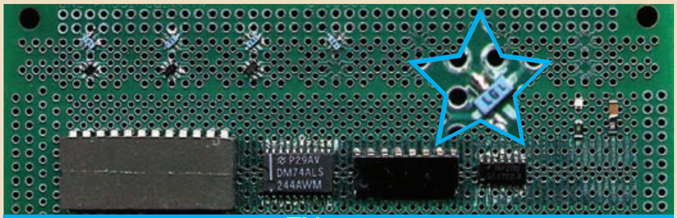

ONE PASSircuit™ goes Surface Mount
See it now at www.onepasinc.com
Stock up now for Dads & Grads
Buy 3 get 1 Free from 5/1/04 to 6/20/04

Electronic Engineering Consulting

Product development from concept to completed circuit board or product. Digital and analog expertise. Microcontroller design for Motorola, Intel, TI ultra low power Microcontrollers, In-House schematic capture and PCB layouts.

Dave Lancaster
Infotech Controls
P.O. Box 2822
Lower Burrell, PA 15068
or call (724) 337-8865
Infotechcontrols@comcast.net

Embedded Systems

USB Digital Control

3.5" x 1.0"

Now with Remote LAN Access

Monitor "trigger" events.
Configure 16 digital I/O or SPI
Use with parallel & serial devices
Automatic notifications & e-mails
Includes S/W and interface board
For robotics, R&D, data-acq, etc.

www.kadtronix.com

Your Idea
on a budget

Product Development
Electrical Design · Firmware
Far East Manufacturing · Prototyping
www.elementinc.com 303-466-2750

*Circuit board layouts
*Prototype assemblies
WWW.OSPREYELECTRONICS.COM

Convert your sketch or print into a quality pcb for a reasonable price. Visit us on the web or call Osprey Electronics at (208) 665 1688 (USA)

Speakers

Your Speaker Source
for all your speaker building needs.

BR-1 KIT
$139.80 PAIR
ASK FOR #300-640

- Great for the speaker building novice.
- Finished system sounds and looks great.
- Easy 2 hour assembly.
- Includes in-depth instructional workbook.

FREE CATALOG
1-800-338-0531
www.partsexpress.com

SOURCE CODE: NVM1

Subscribe today! www.nutsvolts.com

TETSUJIN 2004

Create the new Bionic Man!

The Tetsujin challenge incorporates upcoming technology and ingenuity — see Pages 4 and 5 for details!

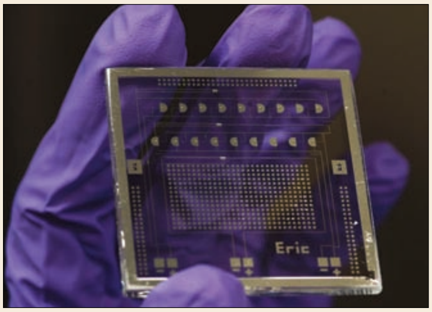

Muscle Those Molecules

Undergraduate student Eric Simone, who studies biomedical engineering at Johns Hopkins University, has extended the traditional application of molecular manipulation to the micro level — right on a computer chip! Because many large molecules are not electrically neutral, the resulting surface charge is a type of "grab handle" that allows them to be moved via the application of an electric field. This process is known as electrophoresis and is quite effective on one of the largest bio-molecules of current interest — DNA.

To get an idea of just how large and complex a DNA molecule is, consider that a human chromosome would stretch to a length of more than an inch if the coiling and supercoiling were undone. Not surprisingly, innovative techniques for manipulation are in demand.

Simone's work extends that of assistant professor Jeff Wang in arranging chip-based micro-electrodes in a unique circular design. This performs certain bio-analytical applications more effectively and could lead to quick, inexpensive tests in the near future. A drop of liquid containing the DNA is simply placed upon the chip and the researcher zooms in with a microscope to the designated area for analysis.

You can visit Wang's webpage at **http://pegasus.me.jhu.edu/~thwang/** for more detailed information.

117,000 Words

Hartford Computer Group, Inc., has announced the availability of the Argus DC 1730 — the first digital camera to retail for under $50.00 that includes a full-color LCD screen. The DC 1730 is a small, lightweight device with VGA resolution, a color LCD display, an automatic flash, and 8 MB of internal memory capable of storing

up to 117 photos. It has three-in-one functionality for digital still, web, and video capabilities. The full-color LCD screen built into the camera allows photo reviewing and editing, enabling consumers to preview and keep only the images they like. This feature — one of the key distinguishing attributes between film and digital cameras — is absent from other entry-level digital cameras.

The camera is bundled with ArcSoft® PhotoImpression software for photo editing and management and the best thing is that you can go out and buy one today for about $45.00.

A Dataport on Your Wrist

Why carry a wireless PDA, advanced cell phone, or RIM Blackberry when you can sport a nifty Fossil watch that keeps you plugged in to the world data net? Yes, you read that correctly — a watch. Enter the Wrist Net™ watch for MSN-Direct®. Wrist Net enables subscribers to stay connected to information by delivering personalized news, weather updates, stock quotes, personal messages, calendar appointments, and more.

The MSN Direct wireless subscription service for Wrist Net is configured on the MSN Direct website, where people select the services and information they would like to receive on their watches — including news headlines, weather updates, personal messages, calendar appointments, stock quotes, and more. The Microsoft-developed data service network covers over 100 of the largest population centers in the US and Canada. Tentative pricing is either $9.95 per month or $59.00 for a full year of service.

Four Fossil watch styles are available with this technology at Fossil stores, leading department stores, and on their website at **http://abacuswatches.com/**

Of course, this means it will be harder to escape from Email — and after time, this watch may seem more like a handcuff than a watch! **NV**


Embedded Solutions.

Dozens of Embedded Controllers with Countless Configurations to fit ANY Industry.

Micro Modules
- Basic Interpreter (on board)
- Assembly or C
- Tiny: .85" x 2" sq.
- Weather Proof
- No Dev. Tools Req.
- Controllers
- Data Acquisition
- ADA, DAC, I/O, RTC, LCD, Keypad...
- Stand Alone or Networked

Starting as Low as $29 –single qty

Communications
- 56k down to 2400 baud socket modems
- Conexant Comp.
- Caller I.D.
- Parallel Line Sensing
- RF Modules - Tiny 433 MHz 900 MHz
- X10 PLIX Interface
- RS232 to RS485 Interface

Starting as Low as $39 –single qty

Controller Boards
- Stackable - RTC
- Backplane - BCC
- Basic Interpreter
- Assembly or C
- Processor Boards
- Expansion Boards
- Relay Boards
- 3.5" x 3.5"
- Custom Configurable
- ADA, DAC, Opto Isolated I/O, RTC, LCD, Keypad...

Starting as Low as $129 –single qty

Micromint Chips
- Basic Interpreter On a Chip
- No Dev Tools Req.
- X10 PLIX Chips Serial Parallel
- 8051 Core
- Low Cost
- DIP or PLCC
- Floating-Point Math
- Commercial or Industrial

As Low as $7 –1k qty

Data sheets, Online Ordering and a Complete Catalog of Products at...

www.micromint.com

Delivering Embedded Controllers for 24 Years

Reduce Your Time to Market.

Minimize your time from conception to production by utilizing one of Micromint's market-proven controllers. Whether your concerns are digital or analog, inputs or outputs, Micromint has a product to fit your needs. Order quantities of one to thousands. Custom design and configurations are available.

With over 500,000 controllers in the marketplace, Micromint has been providing innovative, turn-key solutions to the OEM market for 24 years—from design through production, as well as packaging and shipping the final product. Our broad line of embedded controllers and turn-key solutions can turn your imagination into reality.

Visit our website @ www.micromint.com to see our complete line of OEM Solutions.

Micromint

115 Timberlachen Circle | Lake Mary, FL 32746 | 800-635-3355 | 407-262-0066 | Fax 407-262-0069

Circle #111 on the Reader Service Card.

by Jon Williams

Putting the Spotlight on BASIC Stamp Projects, Hints, and Tips

Stamp Applications

Drumming Up Control

Using a Table-Driven Control Model

Like most men, I'm not real big on the idea of shopping. I know what I want. I want what I want. I know where to go get it — and that's precisely what I do: I go get it. Of course, for every rule there is an exception and, for my shopping rule, there are two: book stores and Tanner Electronics in Dallas, TX. I love going to Tanner — even when I don't need anything specific. Big Jim, Jimmy, Jake, Gina, and the rest of the family are really lovely people; they always have a smile for their customers and are helpful beyond the call of duty.

One of the many joys of going to Tanner is that I frequently run into BASIC Stamp users and am able to chat with them face-to-face. Back in late March, I was in Tanner quite often, as I was working on some prototypes for a new product. During my visits, I ran into quite a few BASIC Stamp users; those collective meetings drove me to the project we're going to discuss this month.

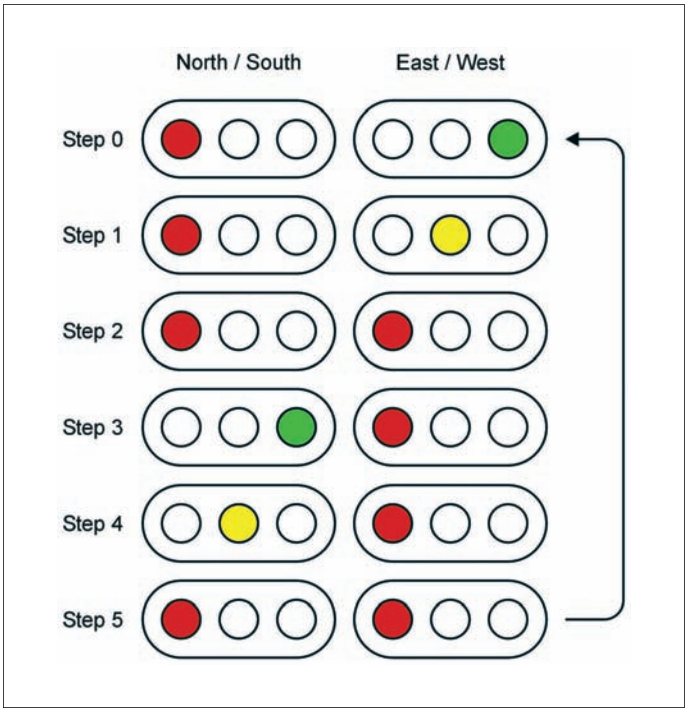

Figure 1. Typical traffic lights sequence.

The first of those customer meetings was with a man who was happy to see BS1 support in the BASIC Stamp Windows compiler and asked me to write more about the BS1 — especially something that he could work through with his son. On another occasion that same week, I chatted with two customers who have somewhat similar uses for the BASIC Stamp. One of those gentlemen is actually a medical doctor who is an avid Halloween enthusiast and the second works in the film industry as a special effects technician and prop builder. Both use the BASIC Stamp as a control element in their projects.

So what can we do with the BS1 that is simple enough for a young man, yet useful for the Halloween display builder and the professional special effects technician? We're going to build a drum sequencer. Now, before you jump on the Internet to Google "drum sequencer," let me warn you that you will be bombarded with hits having to do with MIDI music controllers. That's not what we're doing.

Our drum sequencer is a simple controller that provides cyclical control of multiple outputs; that is, the controller will work through a series of control steps and, upon reaching the end, will restart the sequence at the beginning. There was a time when drum sequencers were, in fact, mechanical devices. A rotating drum with contact points or cams would provide control outputs to a number of circuits. If you're having a hard time visualizing this, just think of a mechanical music box. In a music box, we turn a drum to play and, at the end of the song, it starts over. A music box is a type of drum sequencer.

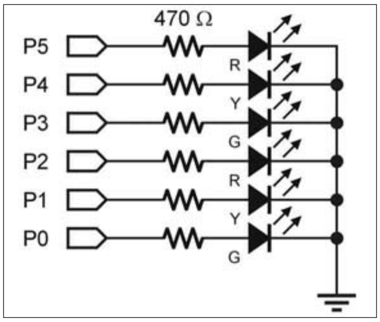

Figure 2. Schematic for traffic lights simulation.

Traffic Control

Let's look at a real life example that is useful to explain the concept and provide a basis for developing our electronic version of this controller. Figure 1 shows a series of steps for elementary control of the traffic lights at an intersection. This is timed control only; there is no provision for external intelligence. The following code will illustrate a brute force method of providing control:

```
Setup:
 DIRS = %00111111

Main:
  PINS = %00100001
  PAUSE 10000
  PINS = %00100010
  PAUSE 3000
  PINS = %00100100
  PAUSE 1000
  PINS = %00001100
  PAUSE 10000
  PINS = %00010100
  PAUSE 3000
  PINS = %00100100
  PAUSE 1000
  GOTO Main
```

If you connect LEDs to P0–P5 (Figure 2), you'll see that the sequence works just as we expected. That's great if it is all we want to do ... but we're human and we know that someone (maybe us) is going to ask for an adjustment or improvement. The first improvement we'll make is to move the output sequence and timing into a table. The reason for this is that we can adjust the elements of the sequence without digging into the heart of our control code.

Here's the code for our software-based drum:

```
Drum:
  EEPROM (%00100001, 10)
  EEPROM (%00100010,  3)
  EEPROM (%00100100,  1)
  EEPROM (%00001100, 10)
  EEPROM (%00010100,  3)
  EEPROM (%00100100,  1)
  EEPROM (%00100100,  0)
```

To make the table easy to read, each step is placed on its own line and contains the outputs and timing value (in seconds). What you'll notice is that there is an extra step and that the extra step has a timing value of zero. This isn't an operational step, of course; it's an indicator that we've reached the end of the table and it's time to start over. It's logical to use the time field as the end-of-table indicator, as there will be other applications for the drum sequencer where all outputs are off.

Now that we've created a drum, let's create the code to "turn" it and activate the outputs:

```
Reset:
  DIRS = %00111111
  drumPntr = 0

Main:
  READ drumPntr, Lights
  drumPntr = drumPntr + 1
  READ drumPntr, stepTime
  drumPntr = drumPntr + 1
  IF stepTime = 0 THEN Reset
  timer = stepTime * StepUnits
  PAUSE timer
  GOTO Main
```

At the **Reset** section, we start by enabling our output pins and setting the table pointer to zero. Normally, we don't need to initialize variables to zero because the BASIC Stamp does this for us, but, in this program, we will need to restart the sequence, so this is a convenient place to put that code.

At **Main**, the real work gets done. The first **READ** from the table goes directly to the lights without the use of a holding variable — this takes advantage of the BASIC Stamp architecture and conserves a valuable resource.

We're able to do this by creating the following definition:

```
SYMBOL  Lights              = PINS
```

After reading the control output, we must update the drum table pointer so that we can get the time for this step. **READ** is used again and the pointer is updated one more time so that, the next time through the loop, it will be pointing at step outputs.

Just a moment ago, we discussed using a zero time value and an indicator for the end-of-table. So, before bothering with timing the outputs, let's do that check. If the time value is zero, the program is routed back to **Reset** and the drum table pointer is reset to zero. By setting our end-of-table outputs the same as the previous step, there will now be a glitch in the actual outputs as this check is taking place.

When we're not at the end (time value is greater than zero), we will multiply the time by a constant that will be useful for **PAUSE**. Here's where another design decision can make the program more flexible. Instead of embedding a "magic number" in the code, we declare a symbolic constant for milliseconds.

```
SYMBOL  StepUnits          = 1000
```

By doing this, we can adjust the overall time of our sequence easily by making just one edit. This also lets us run our sequence in an accelerated mode (by making StepUnits smaller) so that we can verify the sequence.

Figure 3. BS1 POT input circuit.

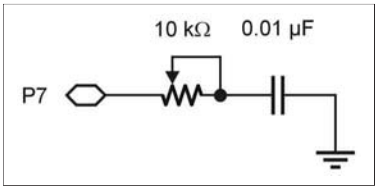

Figure 4. 74HC595 connections.

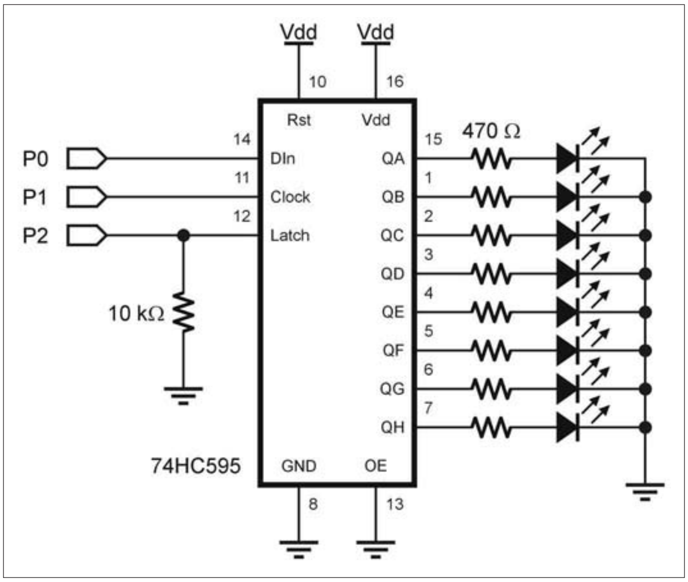

Now we've got a nice little traffic light simulator that we could use to sequence just about anything that will accept digital control outputs. For the moment, let's stick with the traffic light simulation and see how we can polish it up with the resources we have remaining.

The first thing that comes to mind is that it would be nice to adjust the drum speed without having to crack open the code and edit it. If we were using an actual mechanical drum, we would adjust its speed with a motor controller. We can simulate that in software quite easily.

By adding the circuit shown in Figure 3, we can read the value of a potentiometer using the BS1's **POT** function. The value returned by **POT** will range from zero to 255 — but let's add a little bit of design to our speed control. Let's say that we want it to scale the speed from 25% to 200% of normal. This is actually pretty simple: we'll scale the reading from **POT** so that it maximizes at 200 and will not go lower than 25.

```
Get_Speed:
  POT SpdInput, 103, scale
  scale = scale * 69 / 100 + 25
  RETURN
```

I'll bet you were expecting to use the MIN and MAX operators, weren't you? So, why didn't we use them? The reason is that using MIN and MAX would have caused "dead" zones at either end of the pot's mechanical range — what we want is to use the entire range. Okay, then, how did we get there?

We start by taking the total span of our pot reading — 256 units — and dividing it into the span of our desired output, which is 176 units (200 – 25 + 1). What we end up with is 0.686, which we can get very close to by multiplying by 69, then dividing by 100. After that, we add in the minimum value of our output, which is 25.

Here's how the numbers work on the extreme ends of the pot's range:

```
  0 x 69 = 0
  0 / 100 = 0
  0 + 25 = 25

  255 x 69 = 17,595
  17,595 / 100 = 175    (integer math)
  175 + 25 = 200
```

Now that we have a scaling factor (25% to 200%), we can add it into the main loop of our program.

```
  GOSUB Get_Speed
  timer = stepTime * StepUnits / 100 * scale
```

If you're a little new to BASIC Stamp programming, you may wonder why we're dividing by 100 before multiplying by our scale factor. Remember that the BASIC

Stamp uses 16-bit integers and the largest value we can have is 65535 — anything greater will cause a roll over error and lead to undesirable results. With the code the way it is, we can specify step times of up to 30 seconds (assuming StepUnits is 1,000) without any timing problems.

Make It Special — Special Effects

By now, I'm sure we've had enough fun with the traffic light simulation, so let's make some adjustments to our drum controller so that it better fits the needs of our friends who build cool Halloween attractions or movie props and special effects.

The first thing to do is expand the number of outputs and it would be nice to do it in a manner that can be extended. No problem there; we'll use our old stand-by friend — the 74HC595 shift register. Figure 4 shows the connections and — as you can see — there is really nothing to it. The nice thing about the 74HC595 is that we can connect them in a daisy chain mode and get even more outputs (using pin 9 of one 74HC595 to feed the Din pin of the next). For the moment, let's just stick with one device for eight outputs.

The 74HC595 is a synchronous serial device, but the BS1 doesn't have the **SHIFTOUT** instruction that is very popular with the BS2 family. Of course, this is not a big problem; we'll simply write a bit of code to take care of that function for us.

```
Shift_Out:
  FOR idx = 1 TO 8
    Dpin = dataMsb
    PULSOUT Clock, 1
    dOut = dOut * 2
  NEXT
  PULSOUT Latch, 1
  RETURN
```

This code is very simple, but there is a bit of hidden complexity that I want to reveal. This complexity has to do with the way that we declare variables for the BS1. You may have noticed that, in some of my other programs, I start my variable definitions with B2, leaving B0 and B1 free. There is a very specific reason for this. The reason is that B0 and B1 are the only BS1 variables that are bit-addressable, so I make it a habit to reserve these, in case I need to do something bit-oriented, as is required by the **Shift_Out** code.

With that, let's look at the variable declarations that allow the **Shift_Out** subroutine to work.

```
SYMBOL  dOut                  = B0
SYMBOL  dataMSB               = BIT7
```

The variable called dOut is what we'll use to update the outputs (it will be destroyed in the process, so it's temporary). The variable *dataMSB* is BIT7 of the RAM memory map and, by our previous definition, the MSB of *dOut*.

Getting back to the **Shift_Out** code, we can see that it's just a simple loop that will handle eight bits. That makes sense, right? Inside the loop, the routine places the MSB of dOut onto the data pin of the 74HC595. Pulsing the clock line (low-high-low) causes the bit to be moved into the 74HC595. The next step is to shift the bits of dOut left so that we have a new MSB. This is done by multiplying dOut by two. After all of the bits are moved into the 74HC595, we need to move the bits to the outputs. This is done by pulsing the Latch line.

Now, some of you may be thinking that, with all that work, it must take forever to update the outputs. It doesn't. I put the subroutine into a counter loop and found that, even with the "old" BS1, the 74HC595 outputs can be updated about 20 times per second — much faster than we will ever need in this kind of application.

The next upgrade to our controller is a trick I learned long ago when working in the irrigation industry, building sprinkler controllers. We're going to apply a bit of encoding to the time field so that we can have more flexibility on that end. In our original design — with everything set at 100%

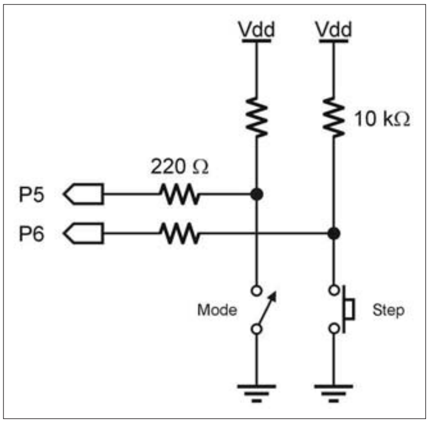

Figure 5. Mode switch and step inputs.

— we can get step durations up to 25 seconds. Maybe we have a holiday lighting display that needs a step output longer than this.

Here's the trick: We're going to use bit 7 of the time field as a multiplier (something other than the two it is now, that is). In this version of the program, bit 7 will tell the program to multiply the time value by 10, so now we have two ranges: 0.1 to 12.7 seconds per step in 0.1 second increments and 1 to 127 seconds in one second increments. Take a look at this drum table:

```
Drum:
  EEPROM (%10000001, %00000101)
  EEPROM (%01000010, %00001010)
  EEPROM (%00100100, %10000010)
  EEPROM (%00011000, %10000011)
  EEPROM (%00000000, 0)
```

The first two steps have bit 7 of the time field clear, so these steps will run in increments of 0.1 seconds. In this case, step 0 will run for 0.5 seconds and step 1 will run for one second. Steps 2 and 3 have bit 7 set, so the multiplier (x10) will be used. This means that step 2 will run for two seconds and step 3 will run for three seconds. Let's have a look at the code that takes care of this:

```
Step_Timer:
  timer = stepTime & %0111111
  IF longStep = No THEN Timer_Loop
  timer = timer * Multiplier

Timer_Loop:
  POT SpdInput, 103, delay
  delay = delay * 69 / 100 + 25
  FOR idx = 1 TO timer
    PAUSE delay
  NEXT
  RETURN
```

To make things convenient, the timing code has been moved into a subroutine. At the top of this code, we'll move the base step time to timer — without the multiplier bit. Then, we can check the multiplier bit (alias longStep) and, if it is clear (0), we will jump right to the timing loop, otherwise we will apply the multiplier to our base time.

After that, we move into the timing section, which starts by reading the pot input. To keep things clean, the potentiometer is read and provides direct timing instead of an adjustment factor, as we did in the final version of the traffic light simulation. The last step is to use the timer as a loop control to create the step timing. The advantage of this method is that the maximum PAUSE duration will be 200 milliseconds (read and scaled from the potentiometer input), so, if we want to interrupt the cycle with some sort of override, we don't have to wait for the entire step to time out. By inserting an "escape route" in the final timing loop, we will only ever have to wait 200 milliseconds to interrupt a step.

All right, let's just add one more feature to our controller before wrapping up, shall we? Since we're now using the 74HC595 to handle the outputs, we have some free I/O pins on the BS1. It seems to me that the ability to add a single-step mode to the controller would be useful. This could be used to check the output sequence or for manual control when step timing is variable (as when operating a prop or film effect).

By using the switch and pushbutton inputs shown in Figure 5, we can add the single-step feature to the controller. The switch will serve as our Mode input: open (P5 will be pulled high) means that we're going to run using timed steps; closed (P5 will be pulled low) means that the Step button will be used to manually advance the sequence.

```
Main:
  READ drumPntr, stepOuts
  drumPntr = drumPntr + 1
  READ drumPntr, stepTime
  drumPntr = drumPntr + 1
  IF stepTime = 0 THEN Reset
  dOut = stepOuts
  GOSUB Shift_Out

Check_Mode:
  IF Mode = MdTimer THEN Timed_Step

Force_Release:
  IF Advance = Pressed THEN Force_Release

Wait_For_Press:
  IF Advance = NotPressed THEN Wait_For_Press
  GOTO Main

Timed_Step:
  GOSUB Step_Timer
  GOTO Main
```

Even adding the timed versus single-step option doesn't complicate our program at all. After updating the outputs with the current step data, the program checks the state of the mode switch. If open, it jumps to **Timed_Step**, which, in turn, calls the **Step_Timer** subroutine. (Remember that PBASIC in the BS1 is very close to assembly language in many respects, so there is no **IF-THEN-ELSE** and we can only branch with **IF-THEN**.)

When the **Mode** switch is closed (single-step mode selected), the program will examine the state of the step button (the input is called **Advance** in the program). The first thing it does is make sure that it's not already pressed. This was a design decision I made so that each step requires a separate button press and release. You can eliminate this if you like, but you may find that a small **PAUSE** is required between steps because, without it, a simple button press may result in the execution of several steps.

Once we know the button is clear, we wait for it to close and, when it does, the program branches back to Main, where we execute the next step. Pretty easy, isn't it? Yet it is a very cool and useful project for many applications. Another option we could add to the program is the ability to single-shot a timed sequence, but, alas, we're out of space, so I will leave that to you. Of course, if you need to do that and can't figure it out, you can always send me a note.

Have fun, and until next time — Happy Stamping. **NV**

Resources

Jon Williams
jwilliams@parallax.com
Parallax, Inc.
www.parallax.com

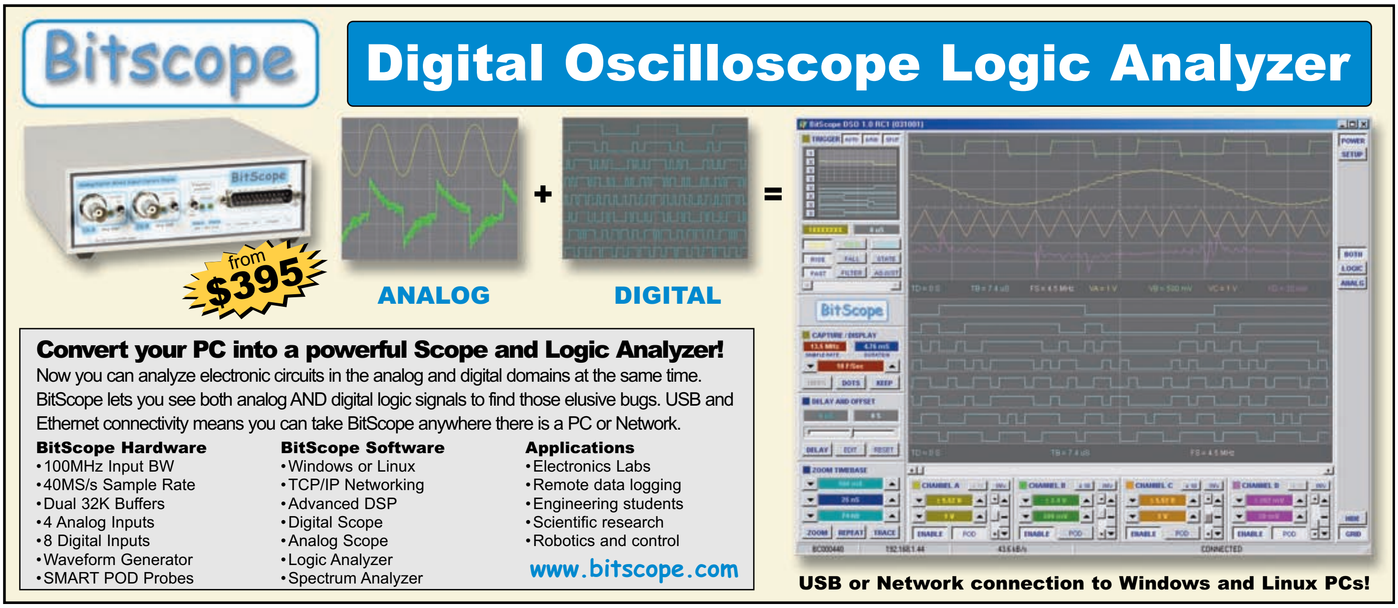

The Latest in Networking and Wireless Technologies

Open Communication

Spread Spectrum Radio: How It Works in CDMA Cell Phones

Despite the fact that spread spectrum (SS) technology is very widely used in every day wireless applications, few people — including technical types — actually know how it or its CDMA derivative works. It is one of the more complex wireless methods, but it has some really great benefits. With over 70% of US cell phones using this method, chances are you use a CDMA cell phone. Here is an introduction to this killer wireless technology.

Narrowband vs. Wideband

Because the electromagnetic spectrum is so precious and limited, radio applications have always been developed in a way that minimizes the amount of bandwidth used. The modulation method has a great deal to do with how much spectrum space an application uses. Much has been done to use modulation methods that reduce the amount of bandwidth needed to the very minimum. So, we are used to thinking of wireless signals occupying very narrow bands or channels.

In transmitting digital data, we are also concerned about channel bandwidth. It always takes more bandwidth to transmit digital data than it does for analog signals, like voice. A typical rule of thumb is that you can usually transmit data at a rate of one bit per Hertz of bandwidth (bits/Hz) meaning that a 1 Mbps data rate and can be transmitted in a 1 MHz bandwidth channel. Other methods have been developed to transmit more bits per Hz, thereby improving the bandwidth efficiency. So, we have again gotten accustomed to seeking ways to cram more data at higher speeds into narrow channels and we have done a good job of this, in general.

There is, however, another method that goes against that principle. Known as spread spectrum or SS, it takes a signal and spreads it out over a very wide bandwidth. In fact, the bandwidth actually exceeds the data rate by 100 times or more in some applications. By doing that, we get some excellent benefits.

For example, we get security of transmission. The process of spreading the information to be transmitted over a wide bandwidth adds some special coding that is difficult for others to copy and recover. It actually just appears to be noise to a standard narrowband receiver.

Second, SS signals are also jam proof. Jammers usually operate on a single frequency and thus do not typically harm SS signals. The security and anti-jamming features make SS very appealing to the military.

Third, SS gives some relief from the multipath problem that plagues most wireless applications. In many high frequency radio uses, the signal is reflected, refracted, diffused, and otherwise misdirected as it travels from the transmitter to the receiver. The result is that the receiver actually receives several versions of the same signal at different times as they are delayed over the different paths. This usually causes fading and signal cancellation. When you use SS, the system is more tolerant of different signal arrival times and special receiver techniques make it possible to use all received signals to boost overall strength.

A huge advantage of SS is that it allows many signals to occupy the same bandwidth simultaneously

Figure 1. A simplified block diagram of a spread spectrum transmitter. The XOR gate is the circuit that does the spreading. The truth table for the XOR is given below.

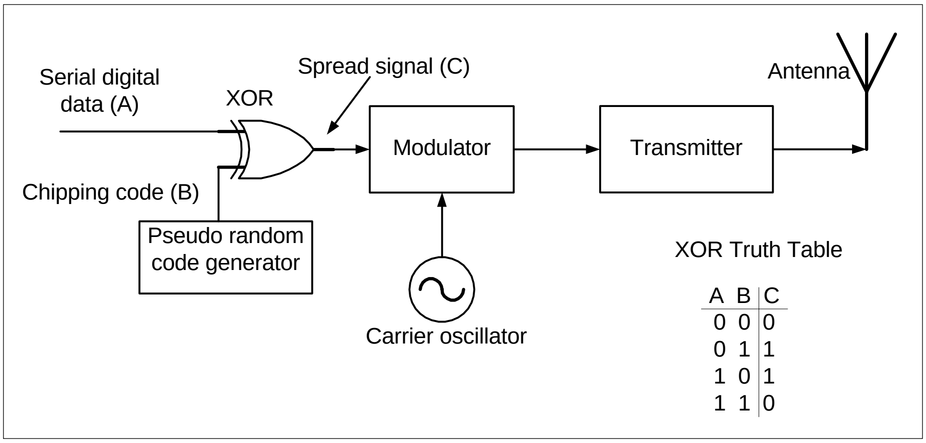

XOR Truth Table

A	B	C
0	0	0
0	1	1
1	0	1
1	1	0

without interfering with one another. For that reason, it is inherently a multiplexing or multiple access method that permits many signals to share common spectrum.

Spread spectrum is a technique for digital communications. It was developed about the time of World War II. The military has used SS for many years. Its use in commercial applications was non-existent because of its high cost and complexity — until the past decade. Today, thanks to amazing technological developments and integrated circuits, SS is just as practical as most other older and less complex narrowband methods.

SS is widely used with cell phones. In this application, it is called code division multiple access or CDMA. It is also the dominant technology used in the highly popular 802.11b Wi-Fi wireless local area networks (WLANs). In this article, I will focus on how CDMA cell phones work.

The Principles of Spread Spectrum

There are two basic ways of creating spread spectrum: frequency hopping (FH) and direct sequence (DS). Both are widely used, but DS is probably the most common and, therefore, the one that will be detailed here. Just to be complete, though, here is a quickie overview of FHSS.

FHSS is a technique that takes the digital data to be transmitted, divides it up, and transmits it in segments — each segment on a different frequency. The transmitter is designed to randomly hop from one frequency to another. The transmitter dwells on that frequency for a short time, during which a portion of the data is transmitted. For example, in the popular Bluetooth wireless personal area networking (PAN) system, the hop rate is 1,600 hops per second over 79 randomly selected hop frequencies in the 2.402 to 2.480 GHz range. That means that the dwell time on each frequency is 1/1,600 or 625 µS. During each dwell period, data is transmitted at a rate of 1 Mbps.

The frequency of transmission is chosen by a pseudo random code generator that produces an arbitrary binary code that, in turn, selects the transmit frequency in a phase-locked loop (PLL) frequency synthesizer. The term “pseudo random” means that the code is not perfectly random. Gaussian or "white" noise is completely random, while pseudo random noise has only partial randomness. Still, pseudo random noise is random enough for this application; its code is random, yet it does repeat after many iterations. To recover the signal, obviously the receiver must have the same pseudo random code so that it can hop from one frequency to the next in the same pattern or sequence.

As you can see, the information really is spread over a huge bandwidth, in this case almost 80 MHz. That is very wide for just a 1 Mbps data rate. The advantage is that a signal like this just looks like random noise to any other receiver. Any receiver that does not hop in the same frequency pattern cannot retrieve the signal, so it, too, only appears to be noise. Furthermore, many signals can use the same bandwidth at the same time and be almost totally invisible to one another because their hop patterns are different.

Direct sequence spread spectrum (DSSS) — the more common type — takes the serial digital data to be transmitted and combines it with a higher frequency serial pseudo random code signal in an exclusive OR (XOR) circuit (Figure 1). The result is that the spread output is at the higher frequency. The lower rate data signal is converted to a higher frequency serial data signal, which, of course, occupies a much greater bandwidth (Figure 2). Therefore, the signal is spread.

The higher frequency code is called a chipping code and one bit time is the chip time. The reciprocal of the chip time is the chipping rate.

The chipping rate defines the bandwidth of the signal. The coded signal is applied to the modulator along with the carrier signal. Binary phase shift keying (BPSK), quadrature phase shift keying (QPSK), or some variation thereof is normally used. The modulator output signal is amplified in the transmitter before being applied to the antenna.

Many individually coded signals may occupy the same bandwidth at the same time without interfering with one another. The method of distinguishing one signal from another is by the unique chipping code assigned to it.

For example, if the pseudo random code generator generates an eight-bit code, there are theoretically $2^8 = 256$ possible different codes. Each transmitter and receiver is assigned a specific code. The receiver is capable of recognizing only this code. All other codes are not recognized, so the signals just appear to be noise. The codes serve the purpose of "channelizing" the shared common band.

Figure 3 shows the receiver. The signal from the antenna is usually downconverted in the usual superheterodyne process to an intermediate frequency (IF) or, in some cases, directly to the baseband modulating signal. The carrier and pseudo random code signal are then combined in a mixer to produce a signal similar to the IF signal containing the data. The correlator then compares the received code with its assigned channel code. If the codes do not match, the output is essentially zero — actually some noise. If the codes do match, the data is then recovered.

CDMA

One of the biggest problems that cellular carriers have had over the years is providing increasing capacity on their systems. The popularity of cell phones essentially overwhelmed most wireless carriers. The number of subscribers quickly exceeded the capacity of the cellular network to handle them. The early first generation analog (Advanced Mobile Phone System or AMPS) system had 832 30-kHz wide channels for both sending and receiving. Once all of the channels had calls on them, new callers were blocked until one of the channels was released.

With new spectrum space overly expensive or difficult — and, in some cases, impossible — to come by, the carriers quickly adopted second generation (2G) digital methods. The most popular was one that used the same 832 available channels, but introduced a time division multiplexing (TDM) scheme that effectively gave three more voice calls per channel. Known as time division multiple access (TDMA), this standard — referred to as IS-136 — quickly became the most popular system.

A European-developed TDMA system is called Global System for Mobile communications or GSM. It is the most widely used 2G digital system in the world and its use is growing in the US. Unlike IS-136 TDMA, it uses 200 kHz wide channels and multiplexes eight calls per channel.

During that same time, CDMA became feasible, thanks to the pioneering SS company Qualcomm out of San Diego, CA. They patented many of the newer methods and developed IC chipsets to make CDMA handsets. In doing this, they solved all of the difficult technical problems that — up to that time — had prevented CDMA from participating in the cellular market.

CDMA uses the spectrum differently than AMPS and TDMA. It actually uses 1.25 MHz wide channels, as opposed to the 30 kHz channels of IS-136 or the 200 kHz channels of GSM. However, it can accommodate as many as 55 callers simultaneously in that bandwidth. Thus, CDMA not only permitted increased capacity for cellular carriers to make more money, but the SS techniques also made cellular wireless more reliable and resistant to the fading and multipath conditions so inherent in

Figure 2. The transmitter signals show the serial data to be transmitted, the pseudo random chipping code, and the spread signal at the XOR output.

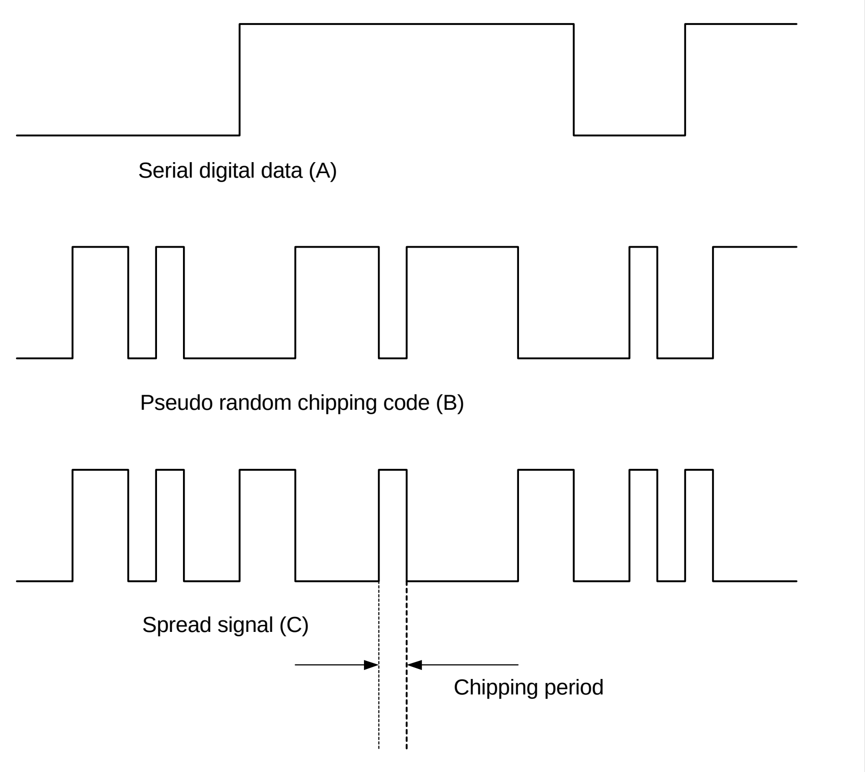

cell calls.

The big question is, how does this method permit that many signals to use the same frequency range without them interfering with one another? The answer lies in the name — code division multiple access. It uses different binary codes assigned to each user to separate them. Here's how it is done.

First, the voice to be transmitted is converted into a serial binary signal with an analog-to-digital converter (ADC). Recall that, to digitize an analog signal, it has to be sampled at a rate at least twice the highest frequency in the signal. For voice, we normally assume 4 kHz as the upper limit, as this gives excellent frequency response, quality, and intelligibility. It also means that the sampling rate must be at least 8 kHz or every 125 µS. If we use an eight-bit ADC, then serialize the resulting signal, we end up with a digital voice signal that varies at an 8 x 8 kHz = 64 kbps rate. Such a signal won't even fit in one of the older 30 kHz bands.

To significantly reduce this rate, the digitized voice signal is put through a vocoder. This is a digital circuit or embedded microprocessor that uses a special algorithm to compress the signal creating a new serial voice signal at a lower rate. There are many different types of vocoders, some with a serial output as low as 7 kbps and as high as 13 kbps. In CDMA systems, the rate is 8.6 kbps.

After adding CRC error detection and other bits, the data rate is increased to 9.6 kbps and this is what is transmitted. At the receiver, the compressed signal is decompressed by the vocoder before it is applied to a digital-to-analog converter (DAC) so that it can be heard.

Next, the serial digital voice signal is encoded and spread. This is done by feeding it to an exclusive OR (XOR) gate along with a high frequency spreading or chipping signal. This binary signal has a frequency about 100 times the digital voice signal. In CDMA, the chipping signal is 1.2288 MHz. The XOR output is at that rate, but is now encoded. This signal is then fed to the modulator on the transmitter. QPSK is the modulation forward channel from the base station to the mobile. Offset QPSK is used in the reverse channel from the handset to the basestation.

The overall system is way too complex to describe here and the above description is an overly simplified one, but should provide the basic idea. The main point is that the spreading is done by a 64-bit channel code that identifies the signal. These 64-bit codes — called Walsh codes — have been carefully selected so that they are what we call orthogonal to one another.

What this means is that, when any two of the codes are compared to one another in a correlation process in the receiver, the output will be zero (binary 0). The output will be one (binary 1) if the received code correlates 100% with the receiver code.

Another important and unique feature of CDMA receivers is a tapped delay line. The delay line introduces a short time delay, in even increments, to the received signals. The signals may be tapped off at any increment. The output of each increment is considered to be one finger or tine of a rake, so the receivers using this technique are referred to as RAKE receivers.

What the RAKE receiver does is to compensate for multipath delays. A signal that has been delayed in transmission will be received and processed by the receiver. The RAKE receiver takes the delayed signal off at the proper point on the delay line so that it lines up with the main received signal. The outcome is that more received signals are added together coherently to produce a stronger, more reliable signal.

There are 64 Walsh codes and 55 of them are used for regular voice traffic in one of the 1.25 MHz bands. The other nine channels are used for pilot, synchronization, and paging signals that the base station and handset use to communicate and synchronize with one another so that a call can be set up.

Synchronization is particularly important for making CDMA work. CDMA base stations actually use a GPS (Global Positioning System)

Figure 3. A simplified block diagram of a spread spectrum receiver. The mixer modulates the internal pseudo random code onto an IF carrier so it can be compared to the received data at the same frequency in the correlator.

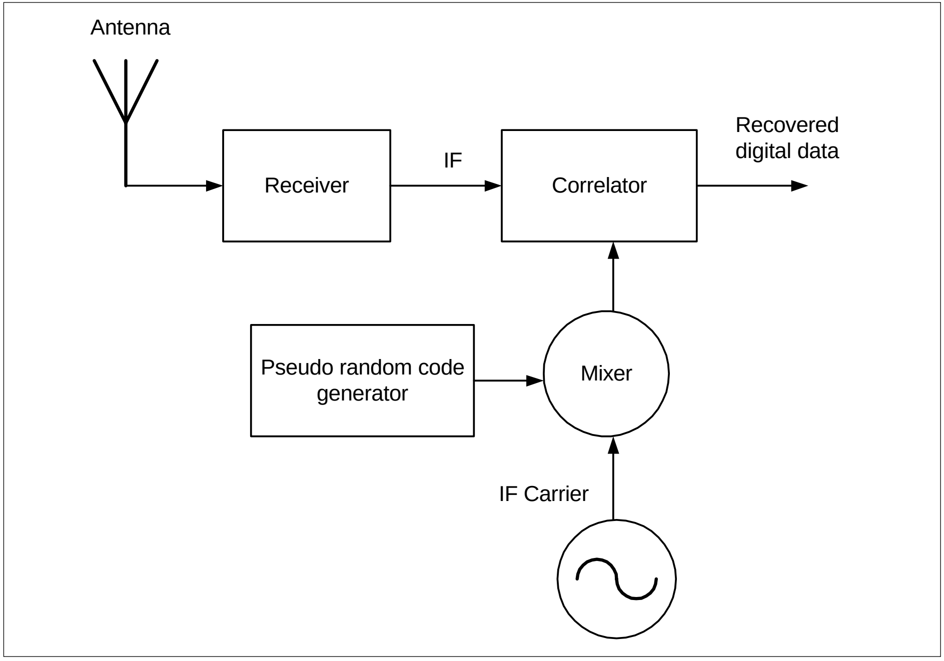

satellite receiver to pick up the timing signals from the GPS satellites. Each satellite contains a rubidium atomic clock that is supremely accurate and precise. It is this timing signal that times and syncs all digital signals in a CDMA system.

A key component of the CDMA cell phone system is automatic power control. CDMA only works reliably if the power levels of all received signals at the base station are the same or nearly so. In the real world, the received power levels can vary widely, depending on the distance the handset is from the basestation, whether it is indoors or outdoors, what physical obstructions are close by and all sorts of other conditions. Nearby handsets will produce a strong signal and those at the outer reaches of the cell site will produce a weak signal.

With such a wide variation, the receiver has a tough time distinguishing between the signals. The CDMA system overcomes this problem by providing an automatic power control mechanism. The base station assesses the level of the received signal and provides feedback to the handset by way of an 800 bps power control signal. It tells the handset to increase or decrease transmitter power. All this is done automatically and results in a flattening or evening out of all the signal levels.

For More Information on Spread Spectrum

Here are two websites where you can find out more than you want or need to know about spread spectrum and CDMA:

PaloWireless Resource Center
www.palowireless.com

Spread Spectrum Scene Magazine
www.sss-mag.com

CDMA Standards

The CDMA system we have been talking about is an industry standard set by the Telecommunications Industry Association and the Electronics Industry Association (TIA/EIA) and is known by its designation IS-95. It was established in 1993. Newer versions — such as IS-95A and IS-95B — provided a data transmission capability of 14.4 kbps and other features. Sometimes, you will hear the IS-95 standard referred to as cdmaOne, which is Qualcomm's name for it.

A newer version is cdma2000, developed by Qualcomm. It is backward compatible with dmaOne, but provides high speed packet data transmission capability, as well as increased voice capacity. This new version of CDMA doubles the number of voice channels available. It uses 128 64-bit Walsh codes, but the bandwidth remains the same at 1.25 MHz.

The first version of cdma2000 — called 1x — has a packet data transmission capability for Email and Internet access. The maximum data rate is 153 kbps, but, in practice, the actual rate is less. The 1xEV-DO version of cdma2000 features a packet data rate up to 2.48 Mbps. A newer version — yet to be deployed — is 1xEV-DV, which gives an even higher rate of 3.09 Mbps. This will permit CDMA cell phones to receive video.

Already, the 1x versions are widely used to transmit digital photos from the digital camera built into many of the newer phones. Finally, there is a version of cdma2000 called 3x that uses three 1.25 MHz channels and a kicked up chip rate of 3.684 M chips per second to get even higher data rates at the expense of spectrum space.

The cdma2000 system is also a recognized standard by the International Telecommunications Union (ITU). It is one of several other so-called third generation (3G) cell phone technologies. Another version — known as wideband CDMA or WCDMA — uses 5 MHz wide bands and a 4.096 M chip per second rate to give very reliable data transmission rates up to 2 Mbps. WCDMA is just now coming on line in Europe and Asia, but is not yet available in the US.

However, cdma2000 is very widely available, especially in 1x format. In fact, the most widespread cell phone technology in the US is CDMA, with about 70% of the market share. If your carrier is Verizon or Sprint, chances are you have a CDMA phone. **NV**

TechKnowledgey 2004

Events, Advances, and News From the Electronics World

Advanced Technologies

Electricity from Sewage

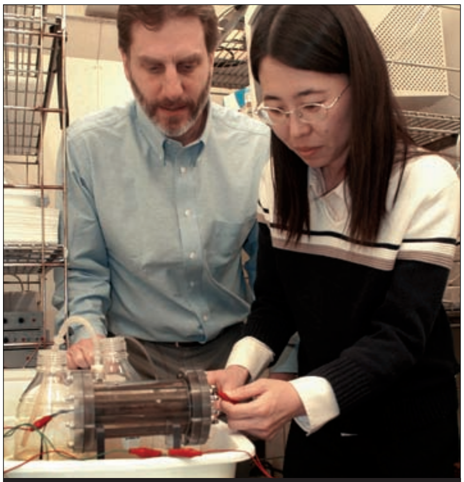

Dr. Bruce Logan, Kappe professor of environmental engineering, and Dr. Hong Liu, postdoctoral researcher in environmental engineering, with a microbial fuel cell. Photo by Greg Grieco, Penn State.

If some environmental engineers at Penn State University (**www.psu.edu**) have their way, sewage treatment and power generation will someday be integrated into a single process. This will be made possible by their microbial fuel cell (MFC), which works through the action of bacteria passing electrons to an anode (the negative electrode of a fuel cell).

Microbial fuel cells work through bacterial actions that pass electrons to an anode (negative electrode of a fuel cell). The electrons flow from the anode through a wire, producing a current, to a cathode, where they combine with hydrogen ions (protons) and oxygen to form water.

So far, experiments have shown that the device is capable of generating between 10 and 50 mW per square meter of electrode surface while removing up to 78% of the organic matter, as measured in terms of biochemical oxygen demand (BOD).

Other researchers have shown that MFCs can be used to produce electricity from water containing pure chemicals, such as glucose, acetate, or lactate. So far, the Penn State researchers are the only ones to show that MFCs can produce electricity directly from wastewater skimmed from the settling pond of a treatment plant.

Logan notes that, in MFCs currently under investigation in other laboratories, various kinds of bacteria are typically added to the system. However, in the Penn State approach, no special bacteria are added. The naturally occurring bacteria in wastewater drive power production. In addition, a reaction (oxidation) that occurs in the interior of the bacterial cell lowers the biochemical oxygen demand, cleaning the water.

The current Penn State MFC is about 6 inches (15 cm) long and 2.5 inches (6.5 cm) in diameter. It contains eight anodes — composed of graphite — that supply about 36 square inches of surface area for the bacteria can adhere to and pass electrons. The cathode is a carbon/platinum catalyst/proton exchange membrane fused to a plastic support tube.

According to Project Director Dr. Bruce E. Logan, "MFCs may represent a completely new approach to wastewater treatment. If power generation in these systems can be increased, MFC technology may provide a new method to offset wastewater treatment plant operating costs, making advanced wastewater treatment more affordable for both developing and industrialized nations .... I'm optimistic that MFCs may be able to help reduce the $25 billion annual cost of wastewater treatment in the US and provide access to sanitation technologies to countries throughout the world."

Prototype PCB Offers 2.5 GHz Rate

As processor clock rates have increased, the performance of printed circuit boards has become a major bottleneck that restricts high speed data transmission in broadband communication systems. At present, PCB traces generally limit signals to about 800 MHz. In response, Taiwan's Electronics Research & Service Organization (ERSO), a part of the Industrial Technology Research Institute (ITRI, **www.itri.org.tw**), has developed the Electro-Optical Printed Circuit Board (EO-PCB), key components of which are flexible organic optical waveguide film that can be laminated onto printed circuit boards and a 90° reflecting mirror. After lamination, optoelectronic devices and their driving devices are assembled and integrated on the circuit board.

The result is an optical transmission system that is far superior in short distance, high speed transmission. The prototype has been shown by a standard eye diagram test to reach a 2.5 GHz transmission rate and thus it can meet the challenge of the next generation in high speed communication. In addition, it has many desirable merits, such as high density, multiple loops, high integration, and suitability for volume production.

In a recent exhibition, ERSO displayed a system consisting of two computers with built-in 1 Gbps network interfaces. Each computer served simultaneously as the signal receiving and sending counterpart for the other. First, an electro-optical transceiver module in one of the computers would convert the electric signals of the network card into optical signals, which were then transmitted through the waveguide on the electro-optical printed circuit board.

After reaching the other end, the optical signals were converted back to electric signals by an optical-electro module and then processed by the network card. Through this framework, a two-way, high speed data exchanging mechanism was achieved.

Computers and Networking

Sun Offers Low Cost Alternative


The Sun Blade 150 offers an affordable alternative to both the Windows® and MacOS® worlds. Courtesy of Sun Microsystems.

It's no secret that most of the world — at least in terms of desktop and mobile computers — operates in the Windows domain. We often think of the Mac OS as the alternative for individuals who have not been assimilated by Microsoft, but there is, in fact, another choice. Once associated only with prohibitively expensive minicomputers, Sun Microsystems now offers some entry level machines that are price-competitive with some of the more popular desktop systems.

For example, the Sun Blade 150 is a 64-bit workstation that is powered by a 550 MHz or 650 MHz UltraSPARC IIi CPU and it comes with up to 2 GB of RAM, a range of graphics options, and up to two 80-GB hard drives. It is geared for use in e-commerce, software development, technical applications, business financial operations, and technical applications. Target industries include education, financial services, health care, government, publishing, and telecommunications.

The Sun Blade 150 comes with Sun's Solaris 8 and 9 operating systems and an optional coprocessor card that allows you to run Windows software at native speeds alongside Solaris applications. The best part is that the list price starts at $1,395.00. If money is not a factor, you can move up to the dual-processor Sun Blade 2500, which starts at $4,995.00. Details are available at **www.sun.com**

Free Email Provides 1 GB Storage

By the time you read this, Google's new "Gmail" service should be available. According to the company, "Unlike other free webmail services, Gmail is built on the idea that users should never have to file or delete a message or struggle to find an Email they've sent or received."

Accordingly, each user is allocated up to 1 GB of storage space, which is roughly equivalent to 50,000,000 pages of Email. Gmail also offers a built-in search capability so you can look for keywords within every message you have ever sent or received, plus spam protection. Details are available at **http://gmail.google.com**

This sounds like such a great offer that a pessimist might believe that there must be a catch and, of course, there is. All of your incoming Email will be scanned, the content will be evaluated, and related advertisements will be inserted into the message. This may not be particularly objectionable, but it has been observed that there is nothing to keep Google from correlating data from Emails and its search site to create detailed user profiles that could be misused.

Also, your messages — even if deleted — may still be stored in the system long after you have closed the account. These considerations have brought a coalition of 28 privacy and civil liberties groups to urge Google to rethink the idea. According to Maurice Wessling of the Bits of Freedom (**www.bof.nl**) organization, "The mail is not just being scanned. It's being indexed and governments might want to know if a word is in the index and, if so, who used it."

If the privacy risk doesn't bother you, check out Gmail.

Circuits and Devices

Small Actuator, Precise Positioning

HSI's size 11 linear actuator provides thrusts up to 25 lb (11.5 kg) and resolutions down to 0.000125 inches (0.003175 mm) per step. Courtesy of HSI.

Hayden Switch & Instrument, Inc. (**www.hsimotors.com**), has introduced a new size 11 hybrid external linear actuator. The rotating, stainless steel, acme lead screw is incorporated into the motor's rotor. Shaft to lead screw couplings are not needed with this design, thus saving time, money, and labor during assembly into the final application. The external linear actuator replaces four different components: a motor, coupling, lead screw, and nut.

The nut on the external linear actuator uses high performance engineering thermoplastics as the rotor drive nut to provide long life in high-precision applications. This external linear hybrid actuator is available in resolutions ranging from 0.000125" (0.003175 mm) to 0.002" (0.0508 mm) per step and delivers thrusts of up to 25 lb (11.5 kg). A standard size 11 external linear has four inches of visible lead screw, but lead screw length, coil termination, and the external nut can be customized.

In this design, the lead screw is an integral part of the motor with a mating nut translating along the screw. As the motor steps, the lead screw rotates, but does not advance. Typical applications include medical equipment, X-Y tables, various automation applications, and valve control.

Swiss Army Knife Memory

The Swissmemory USB Victorinox combines a traditional Swiss army knife with USB memory. Photo courtesy of the Swissbit Group.

Qualifying as this month's "silly gadget that you would love to have" is the Swissmemory® USB Victorinox. The product is the result of a cooperative effort between Victorinox (**www.victorinox.com**), the producer of the original Swiss army knife, and the Swissbit Group (**www.swissbit.com**), a producer of computer memory modules, USB flash memories, and compact flash cards. It includes a stainless steel knife blade, scissors, file, screwdriver, pressurized pen, and a red LED pointer, plus either 64 or 128 MB of Flash memory. (For those who travel on airlines and don't want to trigger a strip search, the company also offers a version that excludes the sharp tools.) The memory portion is compatible with Windows, Mac OS, and Linux. Plus, to prevent unauthorized access to stored data, SecureLOCK software is provided. It is also possible to boot your computer from the device, assuming that the computer's BIOS allows it. The various configurations are priced from 55 to 72 Euros, which was about $66.00 to $86.00 at the time of this writing.

Industry and the Profession

40th Anniversary of System/360

The System/360 Model 22 was introduced as a general purpose computer that combined intermediate-scale data processing capability with small system economy. Its main storage was either 24K or 32K. Photo courtesy of International Business Machines Corporation. Unauthorized use not permitted.

It hardly seems possible, but 2004 is the 40th birthday of IBM's System/360 — the mainframe that sparked the digital revolution in the business world. The System/360 was considered by many to be the most sophisticated computer of its time and is responsible for introducing many primordial concepts that are still in use today, such as transaction processing, microcircuitry, and databases.

More than 300 patents were issued as part of its development. In the original 1964 press release, IBM Board Chairman Thomas J. Watson, Jr. called it, "the most important product announcement in the company's history." (He is not to be confused with Thomas Watson, Sr. who, as IBM Chairman in 1943, surmised, "I think there is a world market for maybe five computers.") The original System/360, with its eight-bit processor, offered clock rates (referred to as "cycle times" in those days) ranging from 1 to 5 MHz and "core memory" of 8 KB to 8 MB. Consistent with IBM's early belief that microcomputers would never catch on, the system boasted, "the ability to respond to inquiries and messages from remote locations at any time. Hundreds of terminal devices can communicate simultaneously with a system while the computer continues to process the basic job on which it is working."

Back in 1964, the monthly lease for one of these powerhouses ranged from $2,700.00 to $115,000.00, "for a typical large multisystem configuration." You could also buy one for $133,000.00 to $5.5 million. For more information on the history of IBM, visit **www-1.ibm.com/ibm/history** **NV**

The Business of Electronics Through Practical Design and Lessons Learned

In The Trenches

Statistics — Part 2

Statistics is the world's most precise way of saying maybe. Engineering is rich with likelihood because things are rarely certain. There's always a chance something may not work right. Understanding how to measure "maybe" is a powerful tool that can aid an engineer in many areas. Last month's column mostly dealt with basic statistical theory. This month, we'll apply basic probabilities. We'll start by looking at some fundamental concepts and the mechanics of probabilities.

Odds Versus Probabilities

There are two general methods for stating the likelihood of some event: odds and probabilities. Las Vegas casinos often use odds. They say the Yankees are three to two favorites to win the game. Statistics classes often use probabilities. They say that there is a 60% chance that the Yankees will win. Is three to two better or worse than 60%? Why are there two methods? Is there a method of converting between them?

An important note: All probabilities are just that. They are probable outcomes, *not* guaranteed outcomes. The outcomes are based on the average of many trials. So, when I say that the Yankees win three out of five games or that a die comes up a "6" once out of six rolls, I assume that you realize that I mean "on average." Including "on average" in every sentence gets old really fast.

Odds are used for betting because they identify wagering ratios. Few bets are even (or one to one). With three to two odds, if you bet $3.00 that the Yankees will win and they do, you will win $2.00. If you want to bet that the Yankees will lose, you have to bet $2.00 to gain (hopefully) $3.00. You can look at odds as a bet on the table. There is $5.00 on the table — $3.00 from someone who expects the Yankees to win and $2.00 from someone who expects them to lose. The winner takes all.

Odds define *both* the winning and losing ratios. The odds are five to one that the die will come up a "6." For every six rolls, "6" will come up once and something else will come up the other five times. The odds that you can draw the ace of spades from a deck of cards are 51 to one. In theory, "for" or "against" should be added to identify how the ratio is applied. This was done above with the "three to two favorites to win," but — with large odds — the smaller number is usually the "winning" value. With the deck of cards example, "51 to one" is understood to mean "51 to one against picking the ace of spades."

A probability defines *only* the likelihood of the specified event; for example, "there is a 60% chance that the Yankees will win." It assumes that 40% contains all other possible outcomes. Since ties are rare in baseball, 40% refers to the likelihood that the Yankees will lose. There is a 16.7% chance that you will roll a "6" with a die. Therefore, there is a 83.3% chance that you will roll something else. Probabilities are almost always specified as percentages. An event that is certain to happen has a

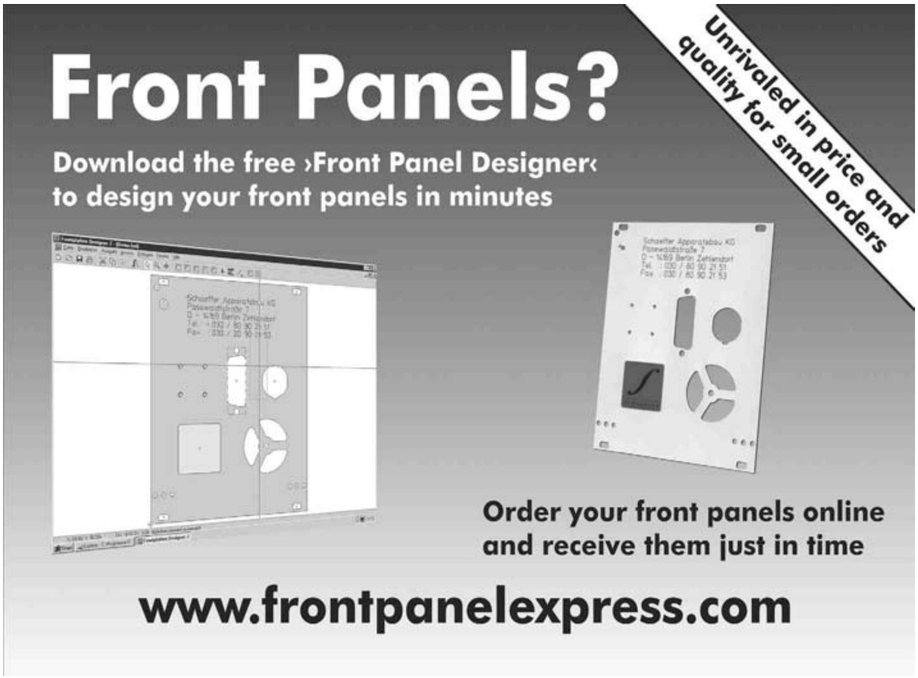

probability of 100%.

Once you understand them, converting from odds to probabilities or vice versa is easy. With three to two odds to win, the Yankees will win three out of five games. It's easy to see that this is 60% (3/5). Conversely, if they win 60% of their games, that means that they win 60 out of 100 games. Just reduce the fraction 60/100 and you get 3/5. This means that they win three games and lose two games out of every five or have winning odds of three to two. The odds of "three to two favorites to win" are the same as a "60% probability of winning." We'll use percentage probabilities for the rest of this discussion.

Unfortunately, in engineering, simple probabilities like these are rare. You almost always have to consider a number of events and determine the likelihood of all these events together. Let’s look at basic combinations of probabilities.

The Probability of *And*

Suppose you know that a high voltage capacitor has a 1% chance of catastrophic failure if the power regulator fails. The regulator fails 1% of the time when there is a power spike of 300 volts on the AC line. Given that there is a 300 volt power spike, what is the chance of the capacitor exploding?

This is easy. Just multiply the probabilities together because both the capacitor *and* the regulator must fail. Therefore, 0.01 times 0.01 is 0.0001 or 0.01%. There is a 0.01% chance (or one chance out of 10,000) of the capacitor exploding whenever there is a 300 volt power spike.

That seems pretty safe — except for the times the system is used where motors are on the same circuit. Starting and stopping large electric motors can easily place 300 volt spikes on the AC line and, if the motor is started and stopped only 10 times a day, then there are about 5,000 spikes per year. The life expectancy of your product is not very good in such an environment.

The Probability of *Or*

There are two different types of statistical *or* events: single and multiple. The single event *or* is just the simple summation of the individual probabilities. For example, rolling a "2" *or* a "3" on a six-sided die has a two out of six chance or a 33% probability. This is just common sense. Rolling a 1, 2, 3, 4, 5, or 6 has a 100% probability. This is because there are only six sides on a die and one of them must come up. This is pretty obvious.

The tricky *or* is when there are multiple events. You want to roll a "6" and you have six dice. You can clearly see the difference. You know intuitively that there is a chance that no "6" may occur. This is different from the single event *or* above, but many people still think that rolling two dice gives you twice the chance. This is simply wrong.

So, what's the probability of rolling a "6" with six dice? The easiest (though tedious) way to figure this out is to sum the probabilities on a die by die basis. (There are other, more sophisticated, methods to directly calculate this.)

The first die gives you 1/6 chance or 16.7%. The second die only needs to be rolled if the first die fails. So, you will roll the second die 83.3% of the time. (That's just 100% minus the probability of the first die.) This means that you take 16.7% of 83.3%, which is 13.9% for the second die. Summing these two percentages (13.9% and 16.7%) gives you a 30.6% probability of rolling a "6" with two dice. (This is less than the 33% chance for the single event *or* in the previous example.)

For the third die, you again take 16.7% (1/6) of the remaining percentage (100% - 30.6% = 69.3%), which is 11.6%. You add that to the running total (30.6% + 11.6%) to give 42.2%. For the fourth die, you again take 16.7% of 57.8% (or 9.7%) for a total of 52%. The fifth die is 16.7% of 48% (that's 100% - 52%) or 8% for a total of 60%. The last die is 16.7% of 40% or 7% for a final sum of 67%. Therefore, rolling six dice will give you a 67% chance of rolling a "6" (or more than one "6").

I detailed all six dice because it's important to see the progression. Each additional die provides a smaller increase in the probability. This critical concept is often overlooked, but this does make sense. Everyone knows that you could roll 100 dice and not

possible. (By the way, it makes no difference if you roll six dice once each or a single die six times.)

Using Probabilities and Statistics

So far, we've learned what Las Vegas bookies mean, improved our poker game, and enhanced our Yatzee playing. How do we use this stuff in engineering? Probably the most important aspect is that you begin to be familiar with the fundamental concepts. So, when someone says that the "Mean Time Between Failures" (or MTBF) is 10,000 hours, you have some idea of what that means. Probability and statistics is a vast field and, truthfully, you'll have to learn a lot more than what is presented here in order to use it effectively. However, even these meager tools have some utility.

Let's take a practical example of a digital data communications system. You've measured it with your brand new Bit Error Rate (BER) tester and gotten a 0.000001 reading. What does that mean? What type of Error Detection and Correction (EDC) software is needed? What BER would you need to use a simpler EDC software? Is it more cost-effective to improve the hardware or the software?

The BER measurement means that there is one error for every 1,000,000 bits (which isn't very good). However, acceptable error rates depend upon what is being sent. If you are sending ordinary TV video, this rate might be acceptable. It would mean that a few pixels would be wrong per frame. It probably wouldn't be noticed by viewers, except in special circumstances (like an all-black screen with a few added sparkles). However, suppose you are sending credit card information from bank to bank. I think you can see that even a handful of errors in a large file can create very significant problems in this sort of application.

EDC software can be simple or complex, but a probability is inherent in every error detection system. This is the probability of multiple errors. Any error detection can guarantee to find some fixed amount of errors; however, as the number of errors increases, the probability of detection falls. If an error is not detected, it certainly can't be corrected. What this means is that the statistical distribution of errors is important. Do the errors come fairly regularly, one at a time, or are there are bursts of many errors followed by a relatively long period of accuracy?

A checksum is a common error detection system that is useful to look at. Many common checksums consist of four digits (sometimes hexadecimal digits) and they can always detect a single error, but suppose someone jiggles the cable as you are transmitting the file and this causes a whole page of data to be dropped. What is the chance that the checksum will find this?

You have to treat the new checksum as a random number because of the significant corruption of the data. Since there are four digits in the checksum, there is one chance out of 10,000 (or 65,536 for hex) that it will match the proper checksum based on chance alone and thus avoid detection. The other times, it will be detected. Maybe.

The "maybe" is because checksums are created by the data that is being sent. There are often patterns in data. So, if part of a pattern is removed and another pattern just happens to fall in the proper sequence, the checksum may not detect the error. The chance of this happening depends on the checksum generator and the data being sent. The net result is that the chances of detecting bad data are reduced by some amount.

While this scenario may not seem significant, it has the potential to greatly reduce the probability of error detection. I'm including it because the concept of extraneous factors affecting failure probabilities is often overlooked. In fact, very often these extraneous factors are the key agents in failures. It is critically important to be aware of this. Too many statistical analyses are flawed by not considering it.

Human factors were not considered in the Three Mile Island nuclear power plant analysis. Falling foam was not seriously considered in the Space Shuttle analysis (even though the fact that it happened with regularity was known). A relatively small hull breach over several watertight compartments sank the Titanic, since the designers had looked at head-on collisions rather than scraping collisions. The list is extensive. Again, remember that statistical analysis is only the starting point. It only provides the "best case" circumstance.

Timing Problems

Your new autonomous robot works well, except for an occasional glitch in the automated steering system. Every now and then — roughly once an hour — it just goes off in its own direction. Why?

You are using 4000 series CMOS logic chips in your custom controller. You are running them at 5 volts, so power drain from the batteries is kept low. You purchased a stand-alone, ultrasonic range finder that has its own controller that runs independently of your controller. It sends TTL level ranges (24-bit values) to your controller at a rate of 100 per second over a serial RS-232 line. You add a diagnostic circuit and find that, when the system fails, your controller sees a range value that makes no sense. Is your controller reading the value wrong or is the range finder sending bad data?

You look at the circuit and see that the 4510 BCD counter in the RS-232 circuit needs 130 nS to recover from a reset. Your computer resets this after it has read and processed the data. You never worried about missing the next range because a range change in 1/100 of a second is trivial.

The subtle — but significant — point is that the processing takes a variable amount of time. Thus, the reset is effectively asynchronous with the range data coming in. Could this be a concern? We'll simplify the problem by just looking at the probability that a range bit transition occurs during the 130 nS reset recovery time. This would result in bad data being read and the robot wandering off.

This is an *and* probability. The bit transition *and* the reset recovery time must occur at the same time. There are 2,400 bit transitions per second (100 values at 24 bits/value). Multiply this times the 130 nS reset recovery time and you get 0.0003212 seconds.

What this means is that, 0.0003212 seconds out of every second, an overlap can occur. Expressed as a probability, it says that there is a 0.03212% chance than an error will occur in any particular second. We can convert this to the probable time per error by inverting it (1/0.0003212), which gives the result of 3,113 seconds per error. Converting to minutes (3113/60) gives 51.88 minutes per error.

This result closely matches what we have seen. About once every hour, there is a bad range value. This is a good place to start troubleshooting. Of course, it doesn't guarantee that this is the problem. Rather, this provides some strong evidence that this could be the cause.

Rounding Errors

Many microcomputers (µC) have simple, floating point math routines. It's not all that unusual to find ones with a 16- or 24-bit mantissa (the decimal part) and an eight-bit exponent. Suppose you have to choose between them. Your mathematical operations are quite extensive, with about 10 multiplications per routine. You know your final result has to be accurate to 0.02% (one part in 5,000). The 16-bit routines seem adequate for this (one part in 65,536), but how can you be sure?

First, I just fibbed. The 16-bit routines are only really accurate to one part in 32,768. This is because one bit has to be used for the sign bit (positive or negative value). So, while your value can be from +32,767 to -32,768, the magnitude of all math operations is limited to 32,768. Well, that's still six times more than what is needed. Isn't that good enough?

Actually, the answer is probably not and the reason is due to rounding errors. Rounding errors can occur whenever there is a conversion from one exponent to another. (Note, some systems don't round; they truncate. In this example, there is no difference.) Because there are only 16 bits available, any result that is greater than 16 bits must be reduced to fit into 16 bits. This can occur with multiplication or addition. When you divide, the remainder needs to be rounded. Rounding errors don't always occur, but — when they do — they cause up to a 0.5 bit error.

So, what's the big deal about a 0.5 bit of error? The big deal is that these errors are cumulative. If you perform 10 multiplications, you could get 10 times 0.5 bits or five bits of

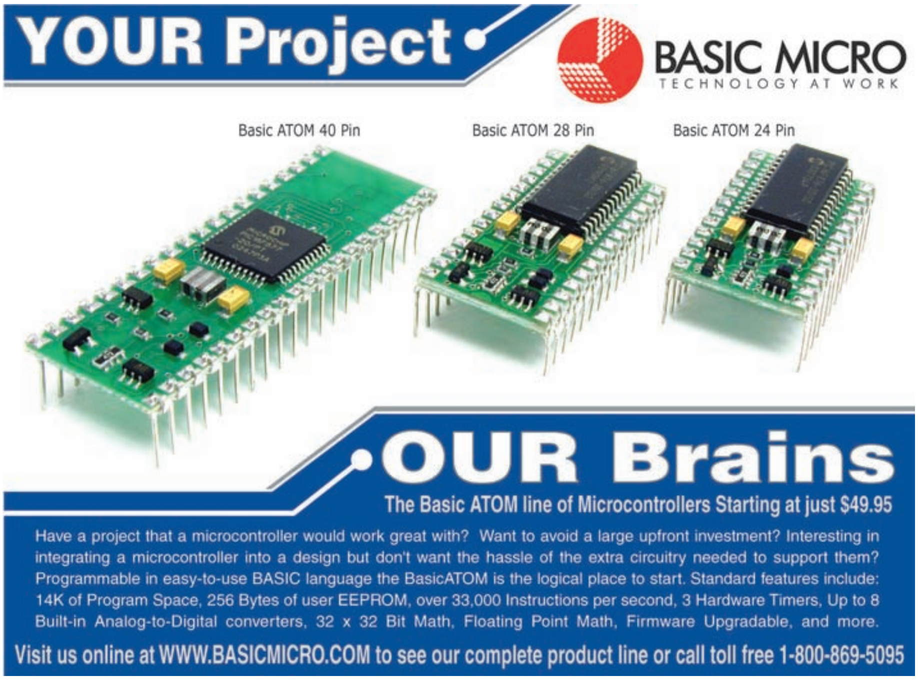

error — worst case. This is indeed a big deal. Five bits of error reduces your 15-bit (plus sign) accuracy to 10 bits. This is only one part in 1,000 accuracy. That's 1/5 of what you need, but your answer might also be perfectly accurate to 15 bits.

Here's how you get a grip on this problem. First, how often will the worst case occur? All 10 math operations have a 50% chance each that the rounding caused an error in the last bit. The chance that every operation had an error is another *and* probability.

Multiply the probability (0.5) by the probability of every possible occurrence (10). This is 0.5 raised to the 10th power or 0.000976 (or 0.0976%). Conveniently, this is just the inversion of two raised to the 10th power or 1,024. So, the error will be five bits once out of every 1,024 calculations. It's useful to note that the answer will be perfect (no rounding errors at all) by an identical probability.

The average error can also be calculated. There are 10 operations that each have a 50% chance of occurring. This means that an average of five errors will occur per calculation. (This is another *and* probability. Multiply the number of operations by the probability.) Sum these five errors of 0.5 bits each to give an average error of 2.5 bits. This reduces your accuracy to 12.5 bits, which is just about one part per 5,000. You will have to decide if your system can manage with occasional results that are not as accurate as needed, even if the average accuracy is acceptable.

The significance of rounding/truncation errors is often overlooked. This is especially the case when complex math routines are forced into small computers. Running a Fast Fourier Transform on a µC may be possible, but it may also be impractical and unreliable.

It's also important to note the difference between resolution and accuracy. The resolution of the system never changed. It was always 15 bits plus sign. The accuracy clearly changed and was dependent upon various operations.

Conclusion

We looked at a few tools that probability has to offer. There are many more. We've also looked at three specific examples of fairly common engineering problems and have seen how probability and statistics can be applied. The truth is that a reasonable understanding of the basic statistical principles can be a powerful tool in almost any technical field. Conversely, a lack of education or experience in this area can hamper anyone's career. I hope that these two columns on statistics have provided some insight and created some interest in this topic. **NV**

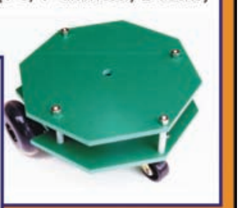

Tech Forum

QUESTIONS

Does anyone know how I might construct a relatively simple field strength meter to orient a UHF antenna while I'm perched on a ladder? Past attempts have involved going repeatedly between the TV and the roof. The circuit would be tuned to one specific frequency — say 500 MHz.

#6041 **Chris Paterson**
Ottawa, Canada

I would like to have my garage open automatically when I pull up in the driveway. Maybe I could use an IR transmitter on my garage and an IR receiver in my car? The IR on the garage could transmit a constant signal so that when the receiver (in my car) picked it up, the door would automatically open. Any suggestions?

#6042 **Doug Barnes**
via Internet

I purchased a Seiko R-Wave atomic clock for my work area. It worked fine for about six months, placed on a cement ledge with a window behind it, but, right after daylight savings time, it stopped picking up the signal. If I move it to another location (facing a different direction) it works fine. Any ideas on how to make some kind of amplifier to help it? This is the only location where everyone can see it.

#6043 **Terry Arnall**
Hayward, CA

If I were to take two 500,000 volt stun guns and connect both positive outputs together and both negative outputs together, would I have 1,000,000 volts? Does the voltage double? I 'm not planning on building an assault weapon, just an experiment which uses high voltage.

#6044 **Jonathan**
via Internet

I have a number of PCI interface cards that lock up the computer on boot. The cards are designed to work in both Macs and Intel PCs to interface the computer with an image setter. I want to fix the cards or have them repaired by a third party. I don't have any schematics, other than the standard PCI interface protocol.

The replacement cost of these boards is around $1,200.00 each, so repair costs of a few hundred per board would not be unreasonable.

Each board contains five programmable chips that I can swap out with ones that I know are good. There are SRAM chips and controllers, a good number of capacitors, and a PCI Matchmaker Chip — all surface mounted. That's it.

How would I go about fixing these cards? I thought of sending them out to have them reverse-engineered to get schematics, but I have never done this and I don't know how reliable the service is.

#6045 **P. Sarantos**
via Internet

ANSWERS

[20411 — February 2004]

I am about to purchase a DVD recorder/player. A sales person at a consumer electronics outlet told me that there were three formats — plus, minus, and progressive — but could not describe any of them. I know what progressive scan is, but what about the other two? I do not understand how a disc recorded in progressive scan can be played back on an interlaced monitor.

There are actually five DVD formats: DVD-R, DVD-RW, DVD+R, DVD+RW, and DVD-RAM. DVD-RAM is the original, recordable DVD media. It was used in a plastic cartridge,

This is a READER-TO-READER Column. All questions AND answers will be provided by *Nuts & Volts* readers and are intended to promote the exchange of ideas and provide assistance for solving problems of a technical nature. All questions submitted are subject to editing and will be published on a space available basis if deemed suitable to the publisher. All answers are submitted by readers and NO GUARANTEES WHATSOEVER are made by the publisher. The implementation of any answer printed in this column may require varying degrees of technical experience and should only be attempted by qualified individuals. Always use common sense and good judgement!

Send all material to *Nuts & Volts Magazine*, 430 Princeland Court, Corona, CA 92879, OR fax to (909) 371-3052, OR email to forum@nutsvolts.com

ANSWER INFO

- Include the question number that appears directly below the question you are responding to.
- Payment of $25.00 will be sent if your answer is printed. Be sure to include your mailing address if responding by email or we can not send payment.
- Your name, city, and state, will be printed in the magazine, unless you notify us otherwise. If you want your email address printed also, indicate to that effect.
- Comments regarding answers printed in this column may be printed in the Reader Feedback section if space allows.

QUESTION INFO

To be considered

All questions should relate to one or more of the following:

1) Circuit Design
2) Electronic Theory
3) Problem Solving
4) Other Similar Topics

Information/Restrictions

- No questions will be accepted that offer equipment for sale or equipment wanted to buy.
- Selected questions will be printed one time on a space available basis.
- Questions may be subject to editing.

Helpful Hints

- Be brief but include all pertinent information. If no one knows what you're asking, you won't get any response (and we probably won't print it either).
- Write legibly (or type). If we can't read it, we'll throw it away.
- Include your Name, Address, Phone Number, and Email. Only your name, city, and state will be published with the question, but we may need to contact you.

similar to the obsolete CD caddies that the old Macintosh computers used to have. DVD+R and DVD-R are very much alike, since they both hold 4.7 GB of data. The only difference is that they are recorded and played differently. DVD+R will play in a computer DVD drive and in most DVD players made within the last year. DVD-R is more compatible and will play in older DVD players (over a year old), newer DVD players (made within the last year), and computer DVD drives.

As far as which format to go with, I would recommend DVD-R. All of the DVD movies sold in stores are recorded on DVD-R discs.

Progressive scan has nothing to do with the physical DVD disc or even the movie copied onto it. Progressive scan and interlacing are just how the DVD player reads the disc. Progressive scan produces a better picture, so when buying your DVD burner/player, I would suggest you go for a model with progressive scan.

Mike Ajax
St. Charles, IL

[3041 — March 2004]

My local middle school is using an old scoreboard system in the gym for basketball games. The old mechanical timer no longer works and I would like to replace it with an electronic timer that can trigger a relay to activate the scoreboard buzzer. It will need to have two timed selections — 30 and 60 seconds — and only needs to activate the buzzer for two seconds.

Why design from scratch when you can "steal" from a perfectly good, existing design? What better place to steal from than *Nuts & Volts Magazine*?

See page 34 of the March 2004 issue. Minor modifications to the "558 circuit" shown in Figure 10 will provide exactly what you need.

First, remove the line that goes from the output of the last timer (the "timing" pin), through the 10K resistor back to the "trigger" input of the first stage. This changes the circuit from a repeating "ring counter" to a "one-shot" which is what you want for the "time-out buzzer" circuit.

Next, change the three 3,300 mF capacitors to 68 mF. This will give the first timer stages a range of 0-60 seconds each, instead of minutes. *(Note: The exact values for the capacitors aren't critical — anything up to about 100 mF or so is usable. Caution: The first stage capacitor does need to be a minimum of about 45 mF and the second/third stage caps must be a minimum of about 20 mF. Similarly, for the fourth stage capacitor, you could use anything down to 4.7 mF.)*

Lastly, for the first stage, replace the 1 meg potentiometer with a SPDT switch that selects one of two identical 1 meg potentiometers (we'll call them A and B).

This circuit does require initial calibration. The process is:

With the switch selecting the "A" potentiometer, adjust the pots on the three leading stages so that you get a 30 second delay. You want "approximately equal" settings on all three potentiometers. When you get close to 30 seconds, you can do the final adjustments using only the second or third stage pot. Now, adjust the last pot for the two second buzzer duration.

Now, switch to the "B" pot and adjust it only until you get a 60 second delay. The circuit is now ready for use.

The added SPDT switch selects the 30 second or 60 second delay and the momentary button from the original circuit starts the timer. This circuit uses the SPDT switch and two potentiometers — rather than using "marked" positions on a single potentiometer — to provide "repeatability" for the timer intervals.

Note: Once set, the second and third stage pots should never need adjustment. Any minor timing drift can be compensated for by adjusting the "A" and "B" pots. Precise duration on the buzzer isn't critical either, so the last pot probably won't require future adjustment, either.

Robert Bonomi
Evanston, Il

[3048 — March 2004]

I would like to install a cat door in an outer wall that can move up and down. I envision a motorized rack and pinion assembly with a pressure sensor that would control the operating circuit. I need sources for rack and pinion assembly.

You can pick up a motorized rack and pinion assembly at an auto salvage yard. These are used in cars with electric seats to move the seats back and forth and up and down. Alternately, you can consider the motorized assembly that is used on electric car windows. Don't forget to put optical or other sensors in the doorway to prevent your cat from being squished.

Leon Mysch
Brooklyn, NY

[3042 — March 2004]

I need a charger circuit for a 6 V 4.5 Ah gel cell. I understand that these batteries should be charged from a constant voltage source until the battery voltage reaches 7.2 to 7.35 volts, with the current not to exceed 900 mA.

The circuit below has been around for awhile and is a relatively simple solution to the problem.

The LM317 does double duty in first supplying a constant current to the gel cell until it is charged and then switching to a constant voltage supply to maintain the charge. The only drawback is the circuit must be reset before every charging cycle. With the component values shown, the charging current is approximately 400 miliamps until the charge cycle ends and then a small current of approximately 20 miliamps keeps the cell topped off. The charging current can be altered by changing the value of R5 per the formula R5 = 1.25/charging current. The SCR is not critical, but should be one with a "sensitive gate" and a low holding current (at minimum 15 miliamps). The one shown can handle 800 miliamps with a 5 miliamp holding current. In this circuit, maximum current through the SCR is no more than 20 miliamps.

To adjust the circuit, replace the battery with a 1K resistor. Adjust R2 until it is on the positive side of its adjustment to insure the SCR will be "on" and the LED will

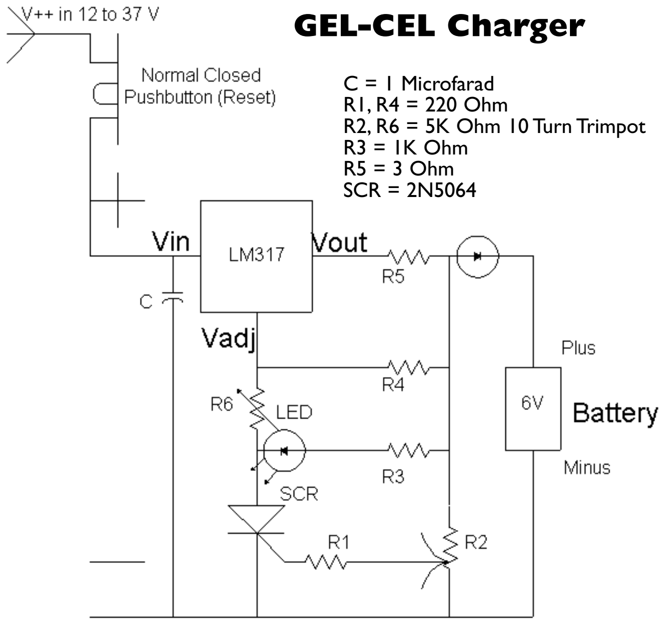

GEL-CEL Charger

C = 1 Microfarad
R1, R4 = 220 Ohm
R2, R6 = 5K Ohm 10 Turn Trimpot
R3 = 1K Ohm
R5 = 3 Ohm
SCR = 2N5064

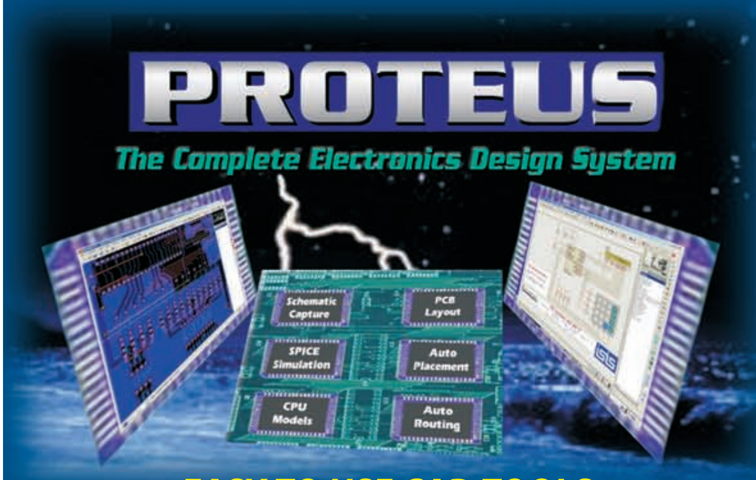

EASY TO USE CAD TOOLS

Schematic and PCB Layout
- Powerful and flexible schematic capture.
- Auto-component placement.
- Rip/entry PCB routing.
- Polygonal gridless ground planes.
- Library of over 8000 schematic and 1000 PCB foot prints.
- Bill of materials, DRC reports and more.

Mixed Mode SPICE Circuit Simulation
- Berkeley SPICE3F5 simulator with custom extensions for true mixed mode and interactive simulation.
- Six virtual instruments and 14 graph based analysis types.
- 6,000 models including TTL, CMOS and PLD digital parts.
- Fully compatible with manufacturers' SPICE models.

Proteus VSM - Co-simulation & debugging for popular Micro-Controllers
- Supports PIC16 & PIC12, AVR, 8051, HC11 and ARM micro-controllers.
- Co-simulate target firmware with your hardware design.
- Includes interactive peripheral models for LED and LCD displays, switches, keypads, virtual terminal and much, much more.
- Provides source level debugging for popular compilers and assemblers from HiTech PICC, Crownhill, IAR, Keil and others.

MicroChip PIC 18
- Supported models of the PIC 18 includes PIC18F242, PIC18F252, PIC18F442, PIC18F452, PIC18F248, PIC18F258, PIC18F448 and PIC18F458.

Basic Stamp BS1 and BS2
- Proteus VSM for BASIC Stamp contains everything you need to develop and simulate designs based around the BASIC Stamp.
- See examples in downloadable Demo at www.labcenter-electronics.com

"I finished my first design, schematic and PCB in one day."
"What a great tool! I love it." DAN GILL

"For the cost of the software compared to the productivity gains, I consider Proteus to be pivotal in the commercial viability of my company and by far represents the best value for money of anything Tempus possesses." ROB YOUNGS, Tempus Consulting

"PROTEUS stands out as the best all-round program in this review. Other programs reviewed have strengths in the pcb design process, Proteus maintains a constant high level of capability throughout. Whether a schematic, user-friendly interactive routing, configurable autoplacing, competent autorouteing, or a combination of the above, PROTEUS handles everything very well." Electronic & Wireless World CAD Review Roundup

Save Time. Save Money.
Proteus Starter Kit – $199 • Full System – $1899
"This is clearly superior in every respect."

R4 SYSTEMS INC.
labcenter Electronics
www.labcenter-electronics.com Tel: 905•898•0665 info@r4systems.com
Circle #47 on the Reader Service Card.

also be on. Adjust R6 until the voltage across the 1K test resistor is 7.3 volts. Remove the power and re-adjust R2 to the negative side of its adjustment and remove the 1K test resistor and connect the battery in its place.

Connect a voltmeter across the battery. Re-apply power and note the full 400 miliamp charging current will be supplied to the battery and its voltage will start to rise. It could go as high as 8 volts, depending on how much charge is in the battery. Adjust R2 until the LED comes on. Try to do this when the battery voltage reaches 7.3 volts. It will be necessary to remove power and repeat this procedure several times until the LED comes on when the battery reaches between 7.3 and 7.5 volts.

Charles Irwin
Hendersonville, NC

[2049 — February 2004]

I am an electronics teacher hunting for electronics jokes to use in class. The cornier the better!

#1 There were four of us working in a TV repair shop 30 years ago. It was said of that shop that there was a lot of contrast, but not much brightness.

Ron Lindow
Pittsburgh, PA

#2 When I was a kid, I used to have a sign in my ham shack that read "DANGER!!! 20.000 OHMS!" It seemed effective with my kid brother.

Dave Koch
Mountain Home, ID

#3 If a marching band is playing in a storm, who is most likely to be struck by lighting? The conductor!

Jon Garee
Newark, OH

#4 Did you hear about the baker who got electrocuted? He sat on a bun with a current in it!

Farnham Cornia
Toledo, WA

[30410 — March 2004]

What is the best place on the web to access IC data sheets? For example, if you input 555, you get to look at the pinouts of a device.

#1 If you are looking for just the pinout information, then try **www.chipdir.org** Fairchild Semiconductor website (**www.fairchildsemi.com**) has full datasheets on a wide variety of digital ICs.

You can also try **www.findchips.com** to locate vendors who sell ICs. Some will provide datasheets, as well.

Daryl Rictor
via Internet

#2 A good website for IC data is **www.questlink.com** not only for chips but for components. Some information is given directly on the website and there are usually links to the sites of the IC manufacturers, where full data sheets can usually be downloaded.

Bill Stiles
Hillsboro, MO

Advertiser's Index

Protek

'Next Generation' Digital Multimeter

Well equipped DMM with True RMS, 3-3/4 Digits, RS-232C Interface, 4000 Count, Auto-Ranging, Analog Bargraph 10MHz Freq. Counter & much more !

Item# PROTEK506 ~~$149~~

Sale $99.00 !

Details at Web Site

> Test Equipment > Digital Multimeters/World Beater Prices

ESD Safe Thru-Hole Soldering/Desoldering Repairing System

Item# CSI701

Only $199.00!

High precision thermostatically controlled station w/ 35W Iron & desolder gun. Built-in double cylinder vacuum pump.

Details at Web Site

> Soldering Equipment & Supplies

> Rework Stations

Digital Laser Tachometer

*5 digit, 6" LCD Display
*2.5-99,999 RPM test range
*Auto-Ranging
*2" to 80" test range
*memory function

$49.00!

Item# DT-6234C

Details at Web Site

> Test Equipment > Specialty Test Equipment

SchmartBoard Combo Pack

Item# 900-0001-01 $49.95

Pre-traced printed circuit boards that are connectable like building blocks. They allow one to build electronic circuits on a SchmartBoard block by block, and then connect the blocks together to form a functional board. Contains 26 parts.

Details at Web Site

> Breadboards & Prototyping Boards

Triple Output Bench Power Supply

with Large LCD Displays

Output: 0-30VDC x 2 @ 3 AMPS & 1ea. fixed output @ 5VDC@3A
Source Effect: $5x10^{-4}$=2mV
Load Effect: $5x10^{-4}$=2mV
Ripple Coefficient:: <250uV
Stepped Current: 30mA +/- 1mA
Input Voltage: 110VAC

CSI3003X3..$179.00
(qty 5+..**$169.00**)

Details at Web Site

> Test Equipment > Power Supplies

www.CircuitSpecialists.com

*Easy to Navigate
*Includes a Search Engine That Really Works
*New Items Added Constantly

Item# CSI825A++

FANTASTIC VALUE!!

MicroProcessor Controlled !

Includes 4 Nozzles !

Only $199.00!

SMD RE-WORK SYSTEM w/Vacuum Pick-up tool.

Details at Web Site

> Soldering Equipment & Supplies > Rework Stations

Circuit Specialists Soldering Station w/Ceramic Element & Seperate Solder Stand

new!

Best Buy $34.95!

*Ceramic heating element for more accurate temp control
*Temp control knob in F(392° to 896°) & C(200° to 489°)
*3-prong grounded power cord/static safe tip
*Seperate heavy duty iron stand
*Replaceable iron/easy disconnect
*Extra tips etc. shown at web site

Item# CSI-STATION1

Rapid Heat Up!

Also Available w/Digital Display & MicroProcessor Controller

Item# CSI-STATION2

$49.95

Details at Web Site

SMD Hot Tweezer

Adaptor Fits CSI **Stations 1 & 2**, and also **CSI906**

Item# $29.00

CSITWZ-STATION

> Soldering Equipment & Supplies > Soldering Stations

Circuit Specialists Inc.

In Business Since 1971

SMD RE-WORK SYSTEM w/Solder Iron

Item# CSI906

Incredible Deal! only $169.00!

Includes 4 Nozzles !

Details at Web Site

> Soldering Equipment & Supplies > Rework Stations

Hand-Held 3.0GHz Universal Counter

*10 digit LCD Display
*High speed 300MHz direct counter w/0.1Hz resolution
*50 Ohm input for full range 1MHz to 3.0GHz coverage
*Ultra sensitive synchronous detector w/16 segment bargraph display of RF signal strength
*4 selectable gate speeds
*Hold switch locks display
*Low power consumption

With Field Strength Measurement

INCLUDES:
*removable telescoping antenna
*Internal 4AA Nicad battery pack
*9VDC, 500mA wall charger
*Pocket Sized Tester

Now Only $99.00!

Item# FC1002

Details at Web Site *> Test Equipment > Frequency Counters*

Super Economy DMM CSI830

1999 count LCD Display
15mm digit height
HfE DATA HOLD
Audible Continuity
Rubber Boot & Test Leads Included

1	10	50+
$9.99	$7.99	$6.99

*DC Volts:200m/2V/20V/200V/600V
*AC Volts: 200/600
*DC Current: 200µ/2m/20mA/10A
*Resistance:200/2K/20K/200K/2M
*Size: 138 x 69 x 31mm

Details at Web Site

> Test Equipment > Digital Multimeters/World Beater Prices

Protek 100MHz Realtime Scope

2 Ch Dual Trace
6" Internal Grid
ALTMAG
ALTTRIG
TV Sync
5 Vertical Modes

Brand New Not Refurbished! Includes 2 scope probes

Super Blowout Price!

A $975.00 Value !

Item# 6510

100MHz only *$499.00*

While Supplies Last!

Details at Web Site *> Test Equipment > Oscilloscopes/Outstanding Prices*

Hot Air Gun w/Digital Display for SMD's

new!

Now, precise temperature and airflow control is at your finger tips with this digitally controlled Hot Air Gun. Quickly solder and de-solder DIP, BGA and SMT electronic components. Plus, be able to shrink, "Heat shrink tubing".

Details at Web Site **CSIHOTGUN-2 $89.00**

> Soldering Equipment & Supplies > Soldering Irons

Single Output DC Bench Power Supplies

High stability digital read-out bench power supplies featuring constant voltage and current outputs. Short-circuit and current limiting protection is provided. SMT PC boards and a built-in cooling fan help ensure reliable performance and long life.

As Low As $85.00!

*Source Effect: $5x10^{-4}$=2mV
*Load Effect: $5x10^{-4}$=2mV
*Ripple Coefficient:: <250uV
*Stepped Current: 30mA +/- 1mA

CSI3003X: 0-30v/0-3amp/1-4..**$89.00**/5+..**$85.00**
CSI5003X: 0-50v/0-3amp/1-4..**$99.00**/5+..**$95.00**
CSI12001X: 0-120v/0-1amp/1-4..**$109.00**/5+..**$103.00**

Details at Web Site *> Test Equipment > Power Supplies*

Circuit Specialists, Inc. 220 S. Country Club Dr., Mesa, AZ 85210
800-528-1417 / 480-464-2485 / FAX: 480-464-5824

Circle #104 on the Reader Service Card.

CircuitSpecialists.com CircuitSpecialists.com CircuitSpecialists.com

Digital Storage Oscilloscope Module

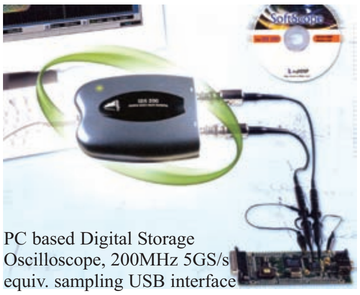

PC based Digital Storage Oscilloscope, 200MHz 5GS/s equiv. sampling USB interface

Convert any PC with USB interface to a high performance Digital Storage Oscilloscope. This is a sophisticated PC basedscope adaptor providing performance compatible to mid/high level stand alone products costing much more! Comes with two probes.

Details & Software Download at Web Site
> *Test Equipment*
> *Oscilloscopes/Outstanding Prices*

Item# 200DSO ..$859.00

2 AMP, 0-18VDC Bench Power Supply LCD Display

Input voltage: 110VAC
Output: 0-18VDC
Current: 0-2A
Source Effect:<0.02%+1mV
Load Effect:<0.01% +5mV
Ripple & Noise:<1mVrms

1	5+
$59.95	$52.95

Purchase OnLine!

Item# CSI1802D

Details at Web Site > *Test Equipment*
> *Power Supplies*

13.8V, 6A DC Regulated Power Supply

new!

Item# CSI1862

Ideal for mobile tranceivers, high amp stepper motors and CNC machines.

Details at Web Site
> *Test Equipment*
> *Power Supplies*

$24.95

Innovative 5 in 1 DMM

Integrated Sound/ Light/Humidity Sensors

Item# CSI8209

*Alt-Mag sweep
*1mV/Div vertical sensitivity
*Alternate trigger
*X5 sweep magnification

Details at Web Site
> *Test Equipment*
> *Digital Multimeters/World Beater Prices*

$49.00

5MHz Dual Channel Digital Scope Meter

Item# S2405

*DC to 5MHz
*Dual Channel
*Sampleing Time:50Ms.S
*Auto Triggering
*Auto Calibration
*Roll & single shot mode
*16 shot reference waveform & set-up memory
*Built in autoranging True RMS Digital Multimeter
*Includes RS-232 I.F. software, RS232 cable & Rubber Boot

$299.00 !

Details at Web Site
> *Test Equipment* > *Hand Held Oscilloscope*

Circuit Specialists 20MHz Dual Trace Scope

Item# CSI6502

*20Mhz Bandwidth
*Alt-Mag sweep
*1mV/Div vertical sensitivity
*Alternate trigger
*X5 sweep magnification
*Large 6"CRT/autofocus
*Comes w/2 (x1 & x10) probes)

$269.00 !

Details at Web Site
> *Test Equipment* > *Oscilloscopes/Outstanding Prices*

Non-Contact Infrared Thermometer

*Non-contact Infrared w/laser pointer measures -*50°C to 500°C/-58°F to 932°F
*Measure temperature of hot or moving objects from a safe distance
*Narrow 8:1 field of view
*Fast Sampling Time
*Switchable C° to F° and Auto Power Off
*Large 3-1/2 Digit (1999 count) backlit LCD with Data Hold

Only $79.00 !

Details at Web Site
> *Test Equipment*
> *Infrared Non-Contact Digital Thermometers*

Item# DT-8812

RF Field Strength Analyzer

Compare at Over $2000 !

New Fantastic Low Price: $1299!

The **3201** is a high quality hand-held RF Field Strength Analyzer with wide band reception ranging from 100kHz to 2060MHz.The 3201 is a compact & lightweight portable analyzer & is a must for RF Technicians. Ideal for testing, installing & maintenance of Mobile Telephone Comm systems, Cellular Phones,Cordless phones, paging systems, cable &Satellite TV as well as antenna installations.May also be used to locate hidden cameras using RF transmissions

Item# 3201

*WFM/NFM/AM/SSB modulated signals may be measured.
*Signal Levels up to 160Channels can be displayed simulaneously on the LCD
*PLL tuning system for precise frequency measurement and tuning
*Built-in Frequency Counter
*LED Backlight LCD (192x192 dots)
*All fuctions are menu selected.
*RS232C with software for PC & printer interface
*Built-in speaker

(Includes Antenna)

(Limited Offer)

Details at Web Site > *Test Equipment* > *2GHz RF Field Strength Analyzer*

Purchase Item# 988-D and get a FREE ! Smoke Absorber

new!

Item# 988-D

XYTRONIC

A $35.00 Value !

While Supplies Last !

Eliminates headaches, nausea and eye irritations often associated with exposure to solder fumes.

STANDARD FEATURES:
*Tip temperature accuracy to within ± 3 °C (6°F)
*Zero Voltage switching and fully grounded design
*Adjustable temperature w/o changing tips
*Controlled by a finger actuated, thyristor switching circuit
*Detachable solder and desolder wands for ease of use and repair
*A self-contained vacuum pump engineered to provide continuous, maintenance free operation

Only $399.00 !

Details at Web Site
> *Soldering Equipment & Supplies*
> *Xytronic Soldering Equipment*

Circuit Specialists now carries FLUKE TEST EQUIPMENT

FLUKE.

Visit our web site & view our extensive offering of FLUKE TEST EQUIPMENT.
High Performance Testers at Circuit Specialists Prices.
We've got ***Great*** deals ! Details at Web Site
> *Test Equipment* > *Fluke Test Equipment*

New !
FLUKE COLOR SCOPES

PROGRAMMABLE DC POWER SUPPLY

Only $199.00 !

Item# CSI3645A

*Stores up to 10 settings for fast & accurate recall
*Backlit LCD display
*High Resolution (1mV)
*PC compatible (with optional RS-232 adaptor module)
*Easy programming w numeric keypad or fast rotary code switch
*Power shut down memory function

PDF Manual available at CircuitSpecialists.com

Details at Web Site > *Test Equipment* > *Power Supplies*

BAG of LEDs DEAL

Normal brightness LEDs now available in RED, GREEN or YELLOW in 3mm or 5mm sizes.Your choice. *Each bag* contains 100 of the *same* LEDs.

BAG-RED3MM..............$1.50 **BAG-RED5MM.............$1.50**
BAG-GREEN3MM........$1.50 **BAG-GREEN5MM.......$1.50**
BAG-YELLOW3MM....$2.00 **BAG-YELLOW5MM...$2.00**

Super Bright LEDs Deal

53B3SCS08...5mm Blue SB LED(1500max MCD)	1+ $0.70	/10+ $0.65	/100+ $0.60
5G3UTB-2... 5mm Green SB LED(1100max MCD)	1+ $0.45	/10+ $0.35	/100+ $0.30
5R3UT-2/R...5mm Red SB LED(3500max MCD)	1+ $0.25	/10+ $0.20	/100+ $0.15
53BW3SCC08..5mm White SB LED(3500max MCD)	1+ $1.69	/10+ $1.49	/100+ $1.18
5Y3STC-2....5mm Yellow SB LED(3500max MCD)	1+ $0.25	/10+ $0.20	/100+ $0.15

Details at Web Site > *Semiconductor Devices* > *LEDs, Displays & Lamps*

Visit our website for a complete listing of our offers. We have over 8,000 electronic items on line @ **www.CircuitSpecialists.com**. PC based data acquisition, industrial computers, loads of test equipment, optics, I.C's, transistors, diodes, resistors, potentiometers, motion control products, capacitors,miniature observation cameras, panel meters, chemicals for electronics, do it yourself printed circuit supplies for PCb fabrication, educational D.I.Y.kits, cooling fans, heat shrink, cable ties & other wire handleing items, hand tools for electronics, breadboards, trainers, programmers & much much more! *Some Deals you won't believe!*

Circuit Specialists, Inc. 220 S. Country Club Dr., Mesa, AZ 85210
800-528-1417 / 480-464-2485 / FAX: 480-464-5824

Circle #104 on the Reader Service Card.

Parallax Summer Special

Our most popular Summer Special is back for another limited time performance in 2004! This all-in-one set-up features the HomeWork Board™ project platform with a BASIC Stamp®2 microcontroller built onto the board. This convenient board is accompanied by the **What's a Microcontroller?** (WAM?) Text, our introductory guide to the world of BASIC Stamp microcontrollers. Once you have completed the 40+ activities in the WAM? Text you can create your own micro-controlled projects. The component kit includes a Parallax Standard Servo, LED's, resistors, capacitors, sensors, a speaker and more. As always, the BASIC Stamp Editor software is included on the CD-ROM (or available online). What are you waiting for?

Save on selected sensors and accessories when you order the **Parallax Summer Special** (#90005; $79.00) online. See www.parallax.com for details on selected sensors.

Offer valid through 09/01/04 or while supplies last.

Order online at www.parallax.com or call the Parallax Sales Department toll-free at 888-512-1024 (M-F, 7am - 5pm, PST).

BASIC Stamp is a federally registered trademark of Parallax, Inc. HomeWork Board, Parallax, and the Parallax logo, are trademarks of Parallax, Inc. © 2004 by Parallax, Inc. All Rights Reserved.

Circle #154 on the Reader Service Card.